TITAN SERIES 90" SQUAT STAND

402065 - TS90SQTRCK



Operator's Manual

Read the Operator's Manual entirely. When you see this symbol, the subsequent instructions and warnings are serious follow without exception. Your life and the lives of others depend on it!

PARTS DIAGRAM / EXPLODED VIEW

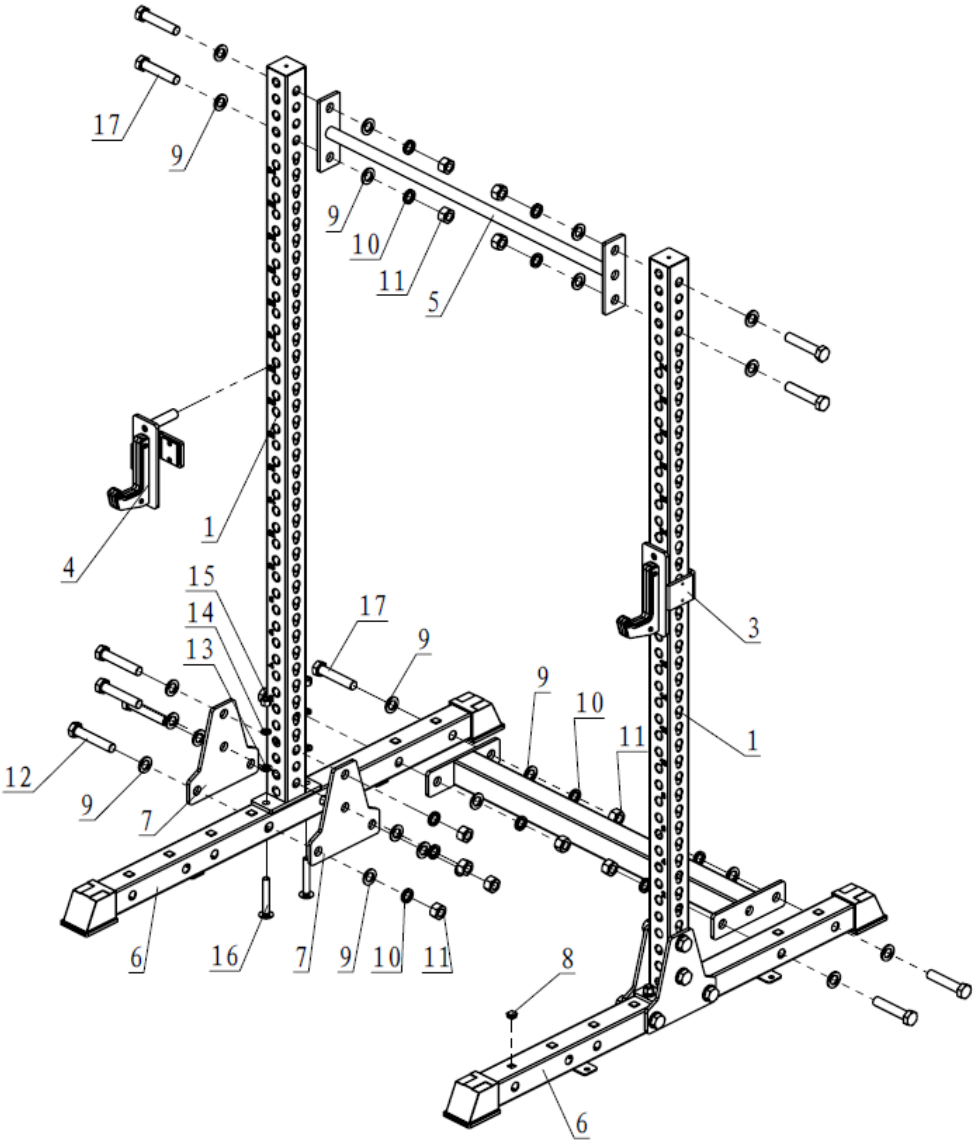

KEY	DESCRIPTION	QTY	KEY	DESCRIPTION	QTY
(1)	SQUAT LOW FRAME	2	(10)	SPRING WASHER Φ24	16
(2)	REAR CONNECTING FRAME	1	(11)	FLAT NUT M24	16
(3)	LEFT BARBELL RACK ASSEMBLY	1	(12)	HEX BOLT M24*130	8
(4)	RIGHT BARBELL RACK ASSEMBLY	1	(13)	FLAT WASHER Φ17*Φ30*3	4
(5)	PULL-UP BAR RACK	1	(14)	SPRING WASHER Φ16	4
(6)	MAIN FRAME ASSEMBLY	2	(15)	FLAT NUT M16	4
(7)	UPRIGHT SPLINT 255*255*10	4	(16)	HEAD BOLT M16*110	4
(8)	F17.6 HOLE PLUG	12	(17)	HEX BOLT M24*120	8
(9)	FLAT WASHER Φ26*Φ44*4	32			

ASSEMBLY INSTRUCTIONS

Step 1

Attach the Rear Connecting Frame (2) between the two Main Frame Assemblies (6) using Flat Nut M24 (11), Spring Washer Φ24 (10), Flat Washer (9), and Hex Bolt M24*120 (17).

Do not fully tighten the bolts at this stage.

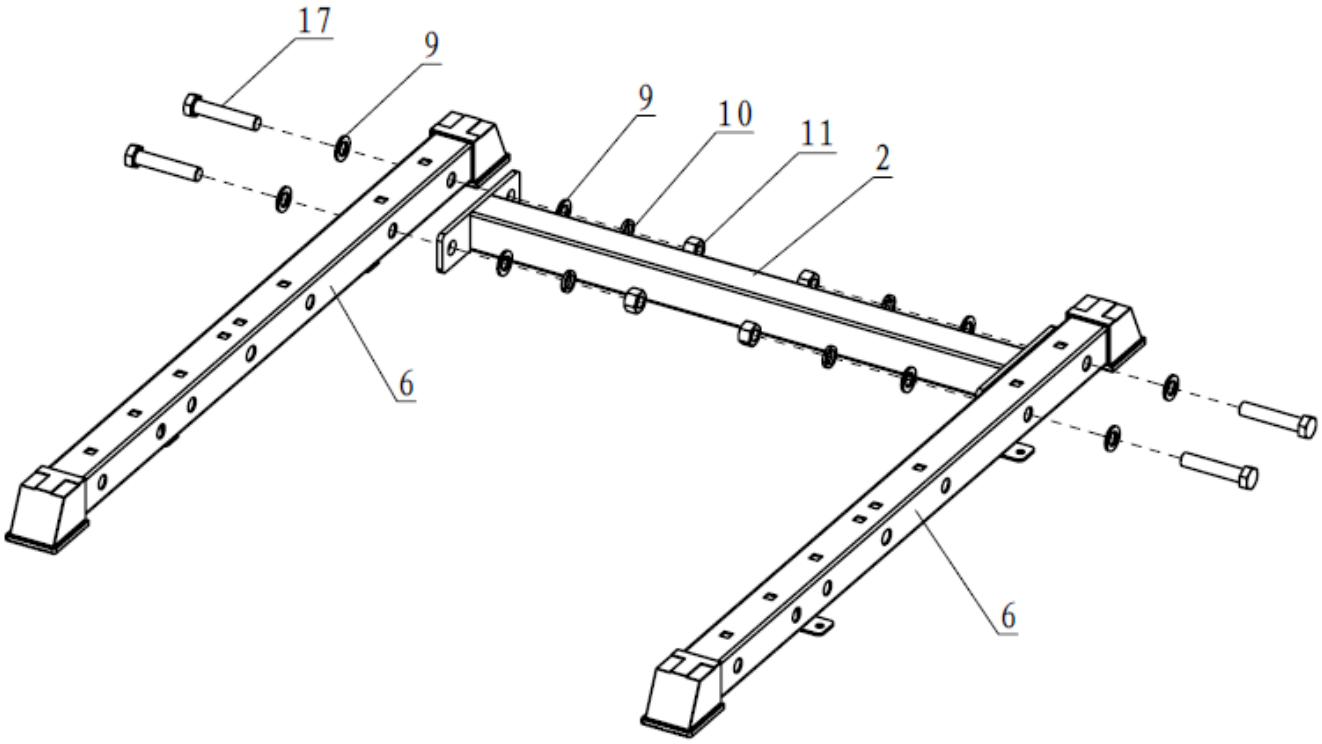

Step 2

Mount the two Squat Low Frames (1) onto the Main Frame Assembly (6) using Flat Nut M24 (11), Flat Nut M16 (15), Spring Washers Φ24 (10) and Φ16 (14), Flat Washers Φ26Φ44*4 (9) and Φ17Φ30*3 (13), Hex Bolt M24*130 (12), Head Bolt M16*110 (16), and Upright Splint 255*255*10 (7).

Do not fully tighten the bolts yet.

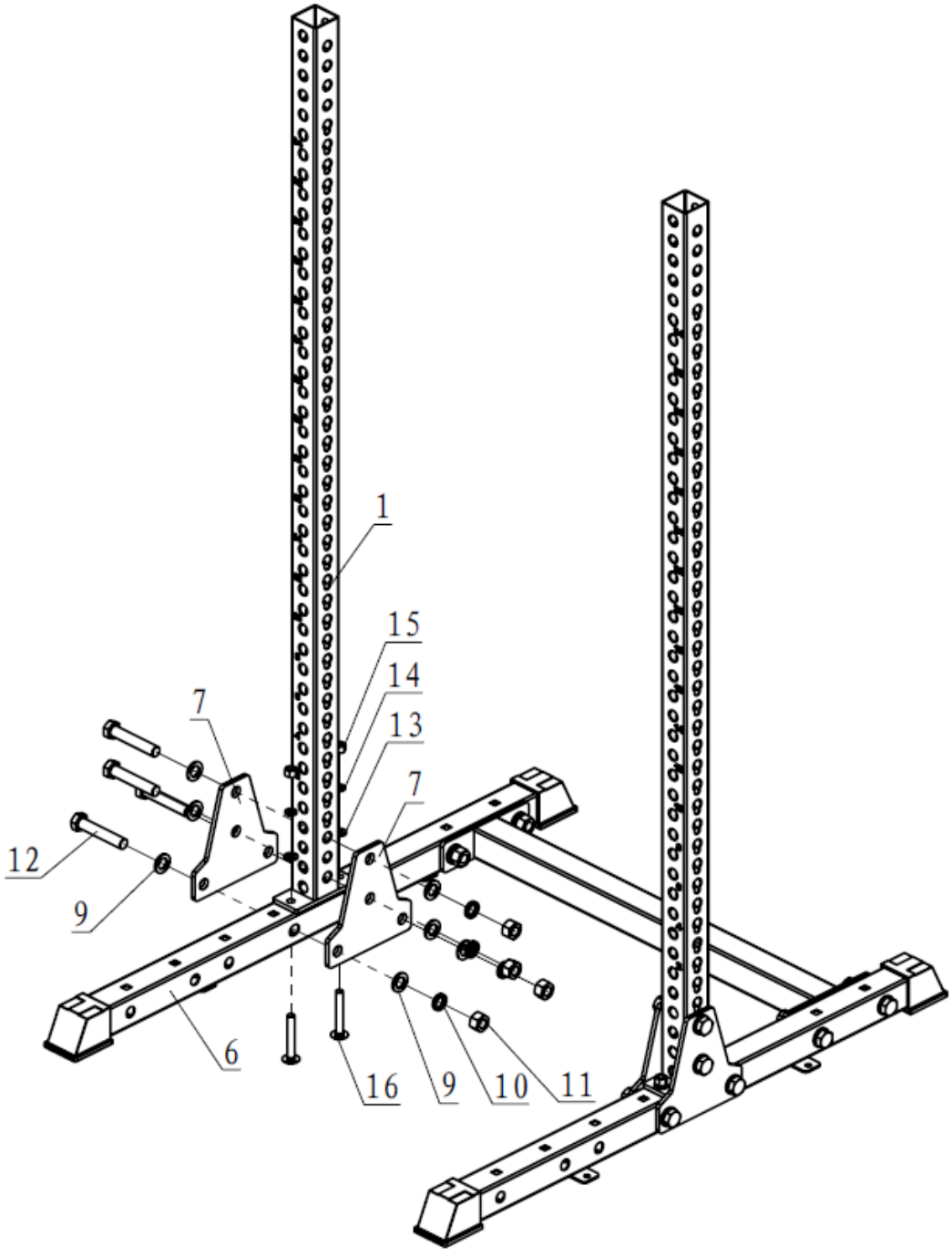

Step 3

Install the Pull-up Bar Rack (5) onto the Squat Low Frame (1) using Flat Nut M24 (11), Spring Washer Φ24 (10), Flat Washer (9) and Hex Bolt M24*120 (17).

Then tighten all bolts.

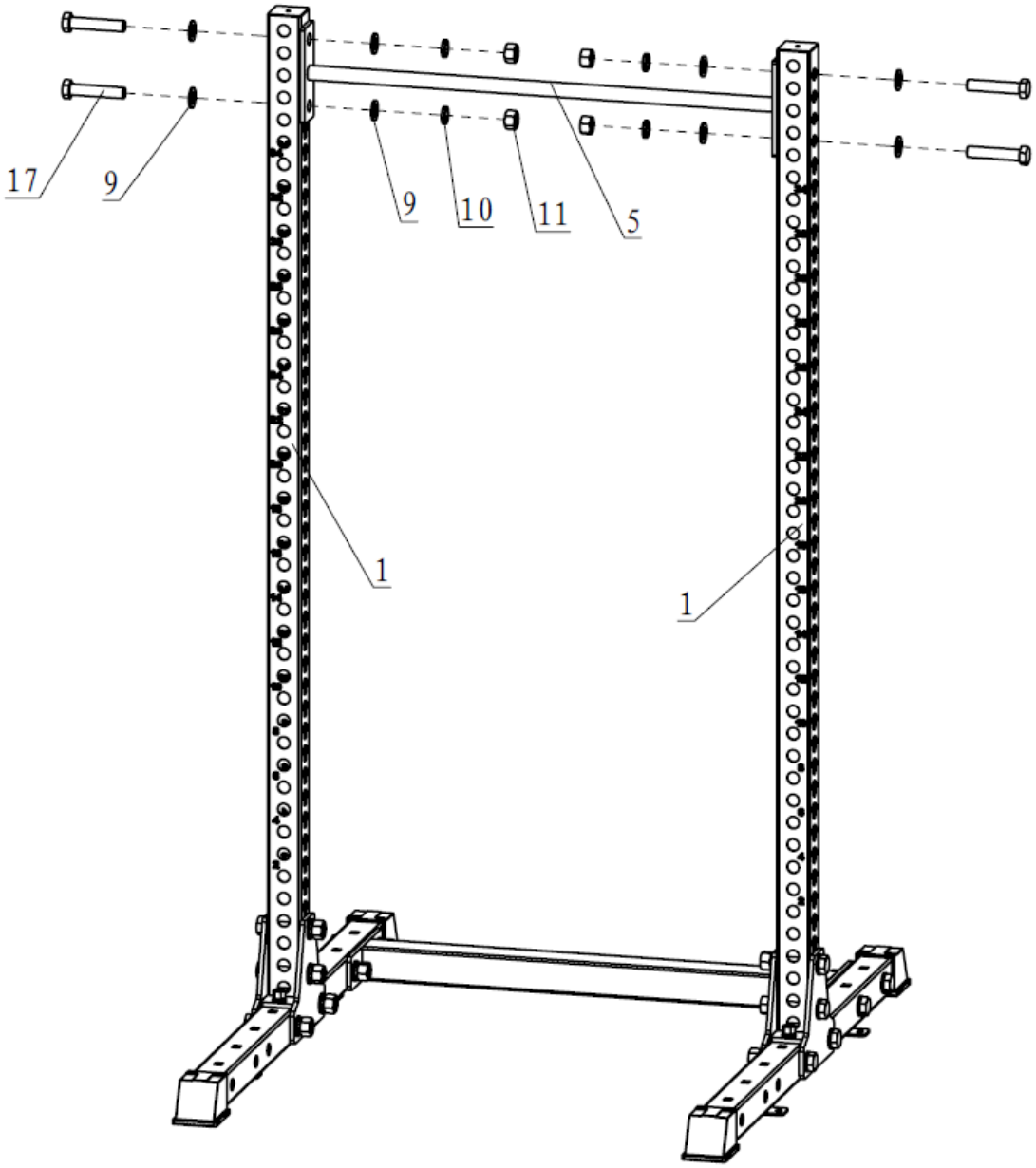

Step 4

Attach the Left Barbell Rack Assembly (3) and Right Barbell Rack Assembly (4) to the desired positions on the Squat Low Frame (1). Then insert 12 pieces of F17.6 Hole Plug (8) into the holes on top of the Main Frame Assembly (6).

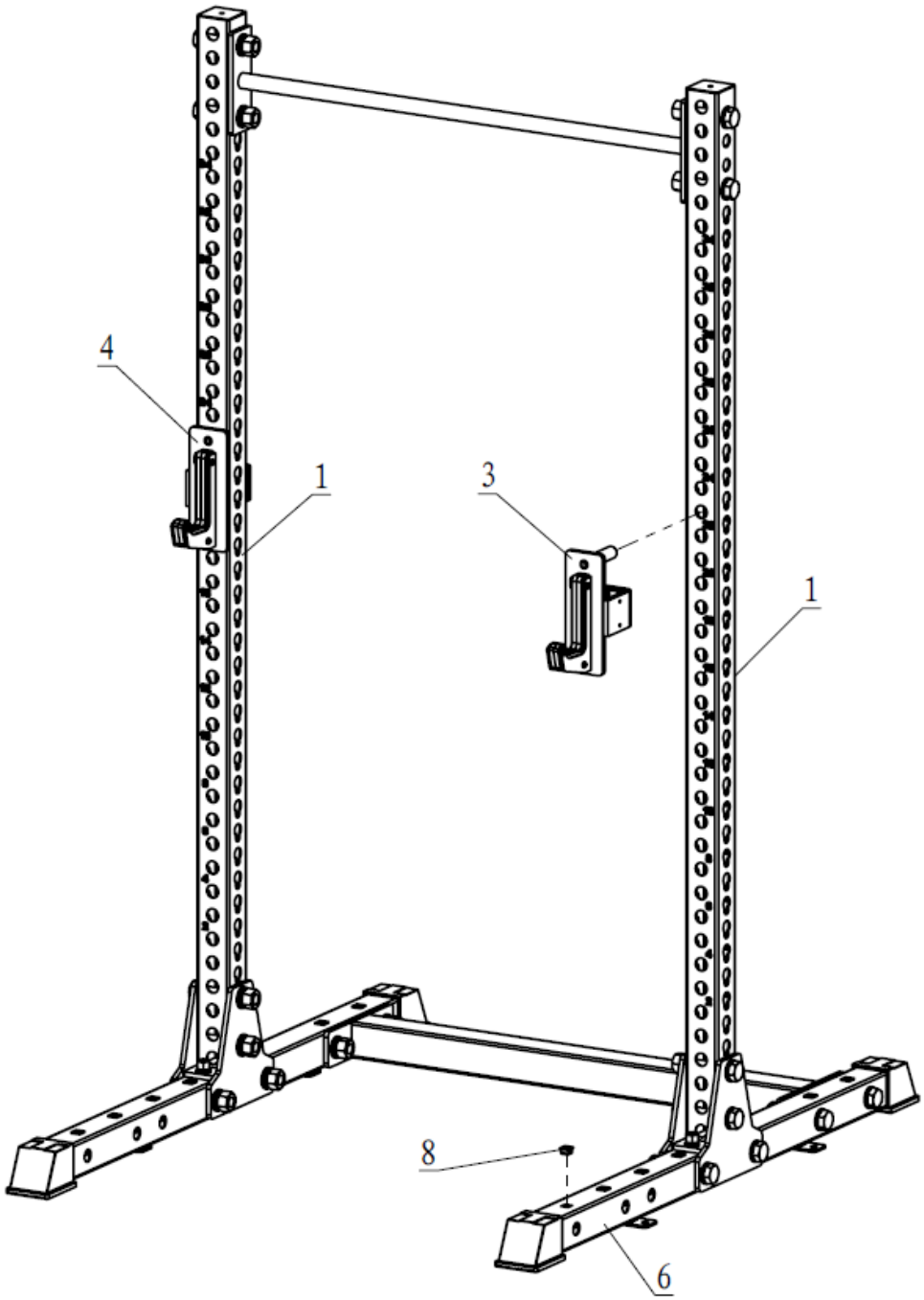

ACKNOWLEDGEMENT OF RISK AND RELEASE OF LIABILITY

The use of any equipment, including this one, involves the potential risk of injury. Apart from any warranty claim that might be presented for a claimed defect in material or workmanship of the product, you accept and assume full responsibility for any and all injuries, damages (both economic and non-economic), and losses of any type, which may occur, and you fully and forever release and discharge Titan, its insurers, employees, officers, directors, associates, and agents from any and all claims, demands, damages, rights of action, or causes of action, present or future, whether the same be known or unknown, anticipated, or unanticipated, resulting from or arising out of the use of said equipment.

This equipment must be used with care by capable and competent individuals under supervision,

WARNING



Heavy object. Use lifting aids and proper lifting techniques when moving.



Choking hazard. Small parts – Please exercise caution if small children or pets are present.



Sharp objects may be involved. Use precaution and protection.

TITAN LIMITED WARRANTY: TERMS, EXCLUSIONS AND LIMITATIONS OF REMEDIES

This product comes with a one (1) year limited warranty that can be found at www.titan.fitness/warranty.html Please review the same for all details regarding the Titan Limited Warranty.

THE TITAN LIMITED WARRANTY FOUND AT WWW.TITAN.FITNESS/WARRANTY IS EXCLUSIVE AND IS IN LIEU OF ALL OTHER WARRANTIES, EXPRESS OR IMPLIED, INCLUDING ANY IMPLIED WARRANTY OF MERCHANTABILITY AND/OR FITNESS FOR A PARTICULAR PURPOSE, EACH OF WHICH IS HEREBY DISCLAIMED.



NEED HELP? CONTACT US FIRST.

1-888-410-1503

info@titan.fitness
www.titan.fitness

© 2025 Titan Brands