TITAN SERIES RACK MOUNTED DOUBLE WALL BALL TARGET

402083 - TS_DBLWBTGT



TITAN FITNESS®

Operator's Manual

Read the Operator's Manual entirely. When you see this symbol, the subsequent instructions and warnings are serious follow without exception. Your life and the lives of others depend on it!

FULL ASSEMBLY/EXPLODED VIEW/ FULL PARTS LIST

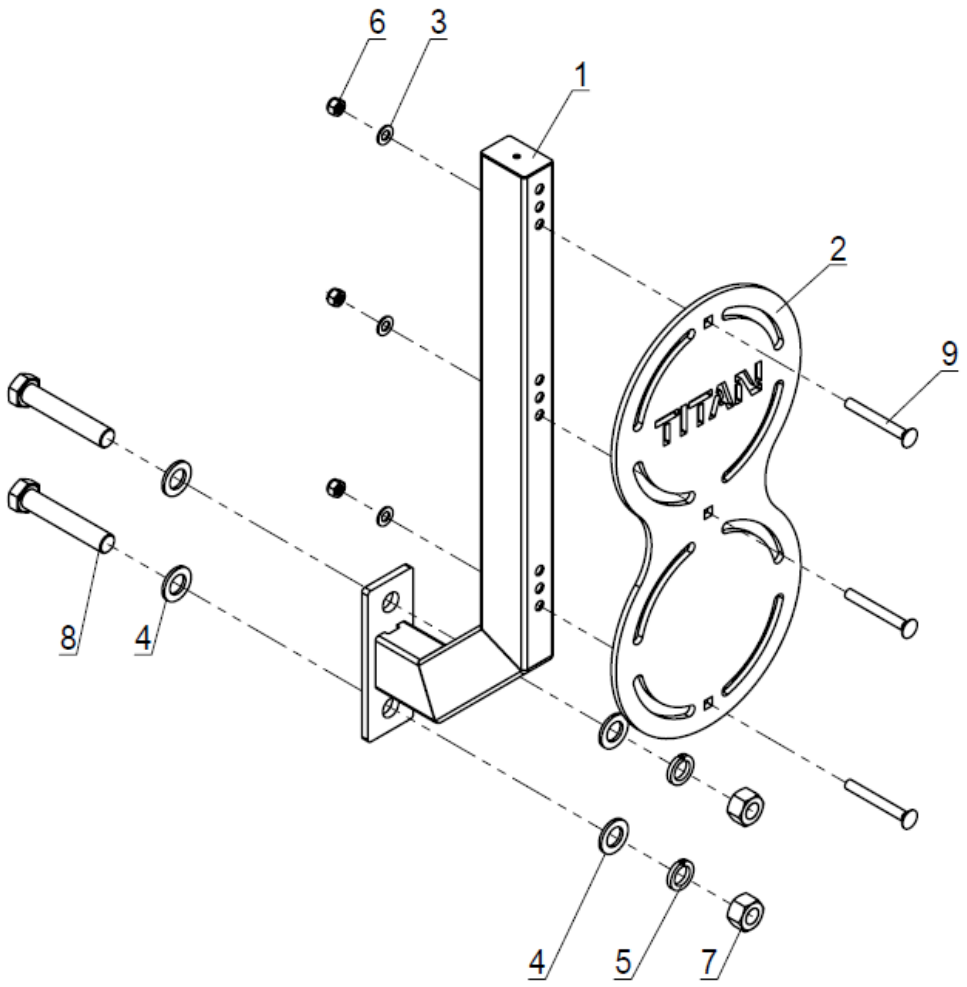

KEY	DESCRIPTION	QTY	KEY	DESCRIPTION	QTY
(1)	TARGET SUPPORT	1	(6)	NUT M12	3
(2)	TARGET PLATE	1	(7)	HEX NUT M24	2
(3)	FLAT WASHER Φ13.5*Φ24*2.5	3	(8)	HEX BOLT M24*130	2
(4)	FLAT WASHER Φ26*Φ44*4	4	(9)	CARRIAGE BOLT M12*100	3
(5)	SPRING WASHER Φ24	2			

ACKNOWLEDGEMENT OF RISK AND RELEASE OF LIABILITY

The use of any equipment, including this one, involves the potential risk of injury. Apart from any warranty claim that might be presented for a claimed defect in material or workmanship of the product, you accept and assume full responsibility for any and all injuries, damages (both economic and non-economic), and losses of any type, which may occur, and you fully and forever release and discharge Titan, its insurers, employees, officers, directors, associates, and agents from any and all claims, demands, damages, rights of action, or causes of action, present or future, whether the same be known or unknown, anticipated, or unanticipated, resulting from or arising out of the use of said equipment.

This equipment must be used with care by capable and competent individuals under supervision,

TITAN LIMITED WARRANTY: TERMS, EXCLUSIONS AND LIMITATIONS OF REMEDIES

This product comes with a one (1) year limited warranty that can be found at www.titan.fitness/warranty.html Please review the same for all details regarding the Titan Limited Warranty.

THE TITAN LIMITED WARRANTY FOUND AT WWW.TITAN.FITNESS/WARRANTY IS EXCLUSIVE AND IS IN LIEU OF ALL OTHER WARRANTIES, EXPRESS OR IMPLIED, INCLUDING ANY IMPLIED WARRANTY OF MERCHANTABILITY AND/OR FITNESS FOR A PARTICULAR PURPOSE,



NEED HELP? CONTACT US FIRST.

1-888-410-1503

info@titan.fitness
www.titan.fitness

© 2026 Titan Brands