TITAN SERIES QUICKSLIDE™ SANDWICH ROLLER J-HOOKS

402119 - QCKSLDJHOOK_TSv2



Operator's Manual

Read the Operator's Manual entirely. When you see this symbol, the subsequent instructions and warnings are serious follow without exception. Your life and the lives of others depend on it!

PARTS DIAGRAM / EXPLODED VIEW

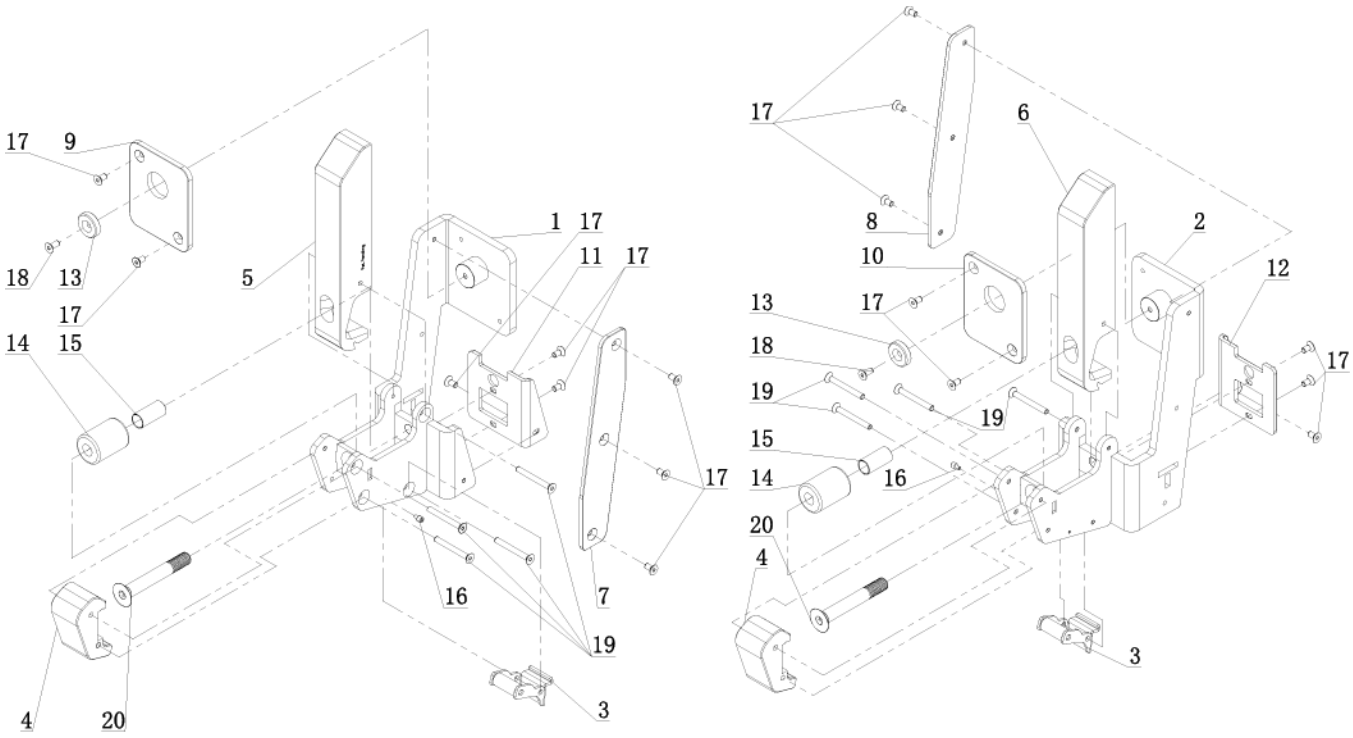

KEY	DESCRIPTION	QTY	KEY	DESCRIPTION	QTY
1	J-HOOK-L	1	11	L-SHAPED GUARD PLATE - L	1
2	J-HOOK-R	1	12	L-SHAPED GUARD PLATE - R	1
3	TRIGGER	2	13	PLASTIC END CAP Φ24.5*Φ5.1*6	2
4	INNER PLASTIC SUPPORT	2	14	ROLLER Φ30*Φ12.2*41	2
5	PLASTIC HOOK PLATE - L	1	15	STAINLESS STEEL SLEEVE Φ15*1*30.5	2
6	PLASTIC HOOK PLATE - R	1	16	SOCKET HEAD CAP SCREW M3*5	2
7	GUARD PLATE - L	1	17	HEX SOCKET COUNTERSUNK HEAD BOLT M5*10	16
8	GUARD PLATE - R	1	18	HEX SOCKET COUNTERSUNK HEAD BOLT M5*12	2
9	REAR GUARD PLATE - L	1	19	HEX SOCKET COUNTERSUNK HEAD BOLT M5*45	8
10	REAR GUARD PLATE - R	1	20	HEX SOCKET COUNTERSUNK HEAD BOLT M12*85	2

ASSEMBLY INSTRUCTIONS

- No assembly required.

ACKNOWLEDGEMENT OF RISK AND RELEASE OF LIABILITY

The use of any equipment, including this one, involves the potential risk of injury. Apart from any warranty claim that might be presented for a claimed defect in material or workmanship of the product, you accept and assume full responsibility for any and all injuries, damages (both economic and non-economic), and losses of any type, which may occur, and you fully and forever release and discharge Titan, its insurers, employees, officers, directors, associates, and agents from any and all claims, demands, damages, rights of action, or causes of action, present or future, whether the same be known or unknown, anticipated, or unanticipated, resulting from or arising out of the use of said equipment.

This equipment must be used with care by capable and competent individuals under supervision,

WARNING



Heavy object. Use lifting aids and proper lifting techniques when moving.



Choking hazard. Small parts – Please exercise caution if small children or pets are present.



Sharp objects may be involved. Use precaution and protection.

TITAN LIMITED WARRANTY: TERMS, EXCLUSIONS AND LIMITATIONS OF REMEDIES

This product comes with a one (1) year limited warranty that can be found at www.titan.fitness/warranty.html Please review the same for all details regarding the Titan Limited Warranty.

THE TITAN LIMITED WARRANTY FOUND AT WWW.TITAN.FITNESS/WARRANTY IS EXCLUSIVE AND IS IN LIEU OF ALL OTHER WARRANTIES, EXPRESS OR IMPLIED, INCLUDING ANY IMPLIED WARRANTY OF MERCHANTABILITY AND/OR FITNESS FOR A PARTICULAR PURPOSE, EACH OF WHICH IS HEREBY DISCLAIMED.



NEED HELP? CONTACT US FIRST.

1-888-410-1503

info@titan.fitness
www.titan.fitness

© 2026 Titan Brands