TITAN SERIES FLIP-DOWN SAFETY BARS

TITANFDWN36v2, TITANFDWN42v2

401651, 401652



Operator's Manual

Read the Operator's Manual entirely. When you see this symbol, the subsequent instructions and warnings are serious follow without exception. Your life and the lives of others depend on it!

FULL ASSEMBLY/EXPLODED VIEW/ FULL PARTS LIST

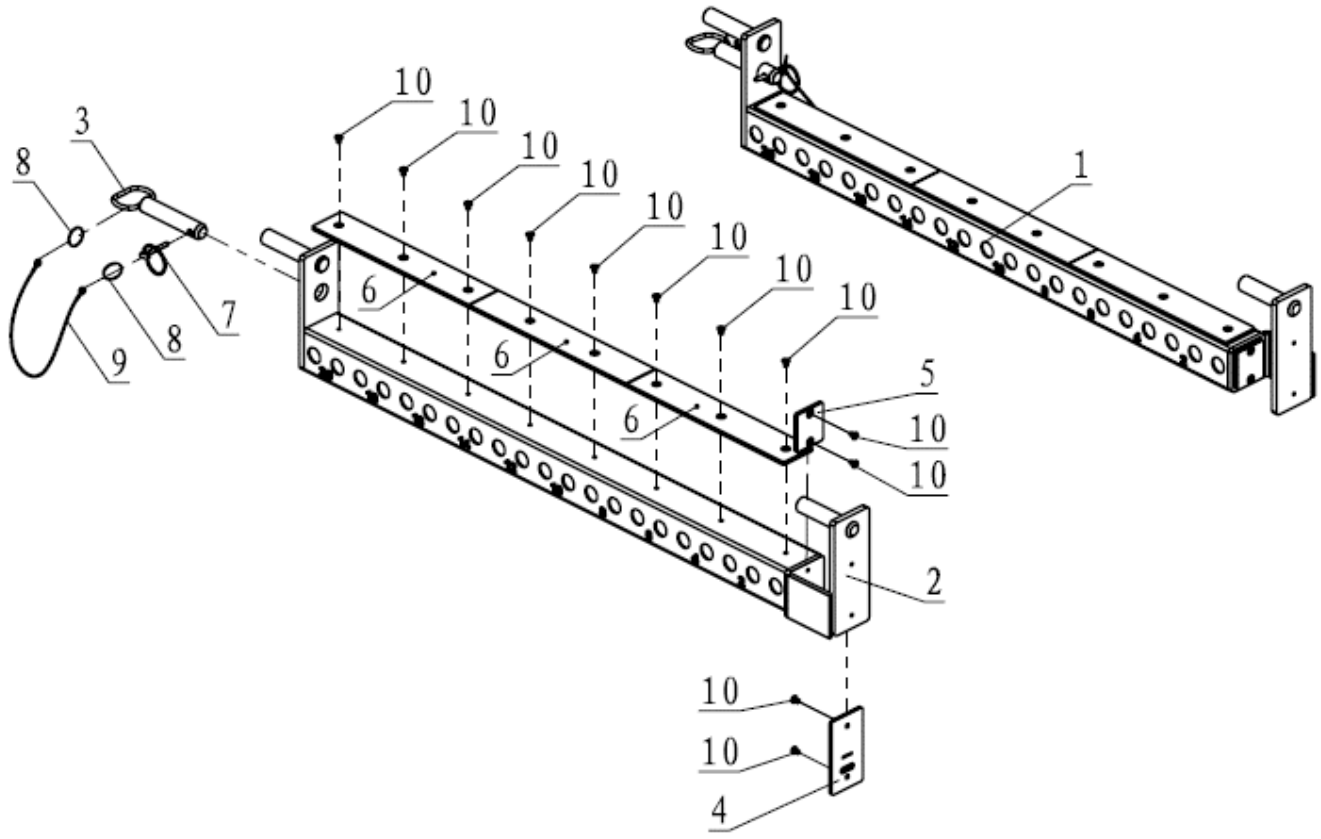

KEY	BOX	DESCRIPTION	QTY	KEY	BOX	DESCRIPTION	QTY
1	1	LEFT SAFETY ARM	1	6	1	PLASTIC PLATE 475*65*5	6
2	1	RIGHT SAFETY ARM	1	7	1	SMALL PIN Φ6*45	2
3	1	PIN	2	8	1	PULL RING Φ1.5*31	4
4	1	PLASTIC PLATE 130*68*5	2	9	1	CABLE Φ5.5*Φ1.6*330	2
5	1	PLASTIC PLATE 68*58*5	2	10	1	SCREW M6*10	24

Step 1

Assemble the Left Safety Arm (1) and Right Safety Arm (2) to the Upright Frame on Power Rack in properly, then fixing by Pin.

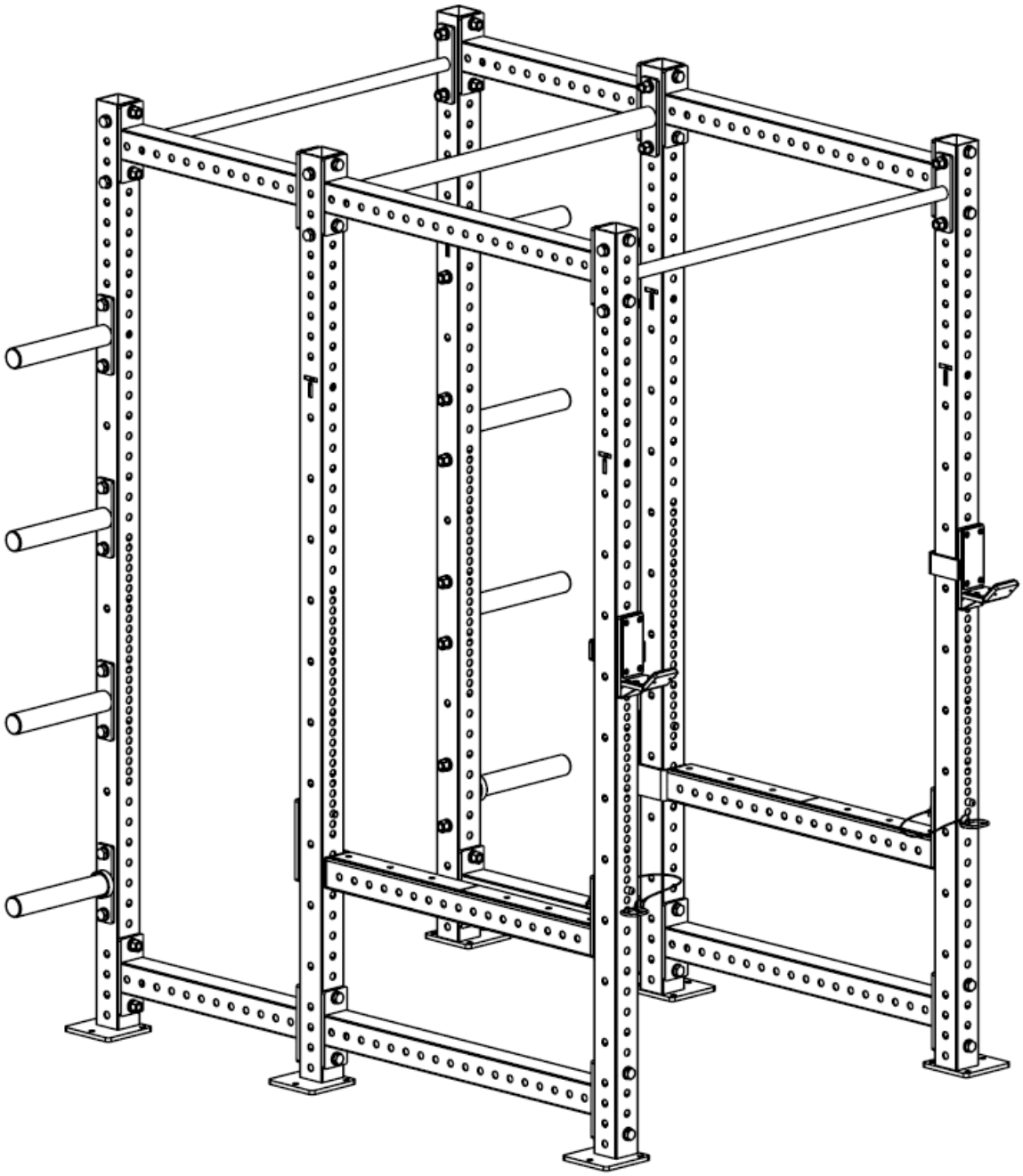

ACKNOWLEDGEMENT OF RISK AND RELEASE OF LIABILITY

The use of any equipment, including this one, involves the potential risk of injury. Apart from any warranty claim that might be presented for a claimed defect in material or workmanship of the product, you accept and assume full responsibility for any and all injuries, damages (both economic and non-economic), and losses of any type, which may occur, and you fully and forever release and discharge Titan, its insurers, employees, officers, directors, associates, and agents from any and all claims, demands, damages, rights of action, or causes of action, present or future, whether the same be known or unknown, anticipated, or unanticipated, resulting from or arising out of the use of said equipment.

This equipment must be used with care by capable and competent individuals under supervision,

WARNING



Heavy object. Use lifting aids and proper lifting techniques when moving.



Choking hazard. Small parts – Please exercise caution if small children or pets are present.



Sharp objects may be involved. Use precaution and protection.

TITAN LIMITED WARRANTY: TERMS, EXCLUSIONS AND LIMITATIONS OF REMEDIES

This product comes with a one (1) year limited warranty that can be found at www.titan.fitness/warranty.html Please review the same for all details regarding the Titan Limited Warranty.

THE TITAN LIMITED WARRANTY FOUND AT WWW.TITAN.FITNESS/WARRANTY IS EXCLUSIVE AND IS IN LIEU OF ALL OTHER WARRANTIES, EXPRESS OR IMPLIED, INCLUDING ANY IMPLIED WARRANTY OF MERCHANTABILITY AND/OR FITNESS FOR A PARTICULAR PURPOSE, EACH OF WHICH IS HEREBY DISCLAIMED.



NEED HELP? CONTACT US FIRST.

1-888-410-1503

info@titan.fitness
www.titan.fitness

© 2023 Titan Brands