TITAN FITNESS® FAN BIKE

FANBKv1b

401870



Operator's Manual

Read the Operator's Manual entirely. When you see this symbol, the subsequent instructions and warnings are serious follow without exception. Your life and the lives of others depend on it!

NOTE: Online manual also available – Scan this QR code
Or go to support.titan.fitness and search FANBKv1b

PARTS DIAGRAM / EXPLODED VIEW

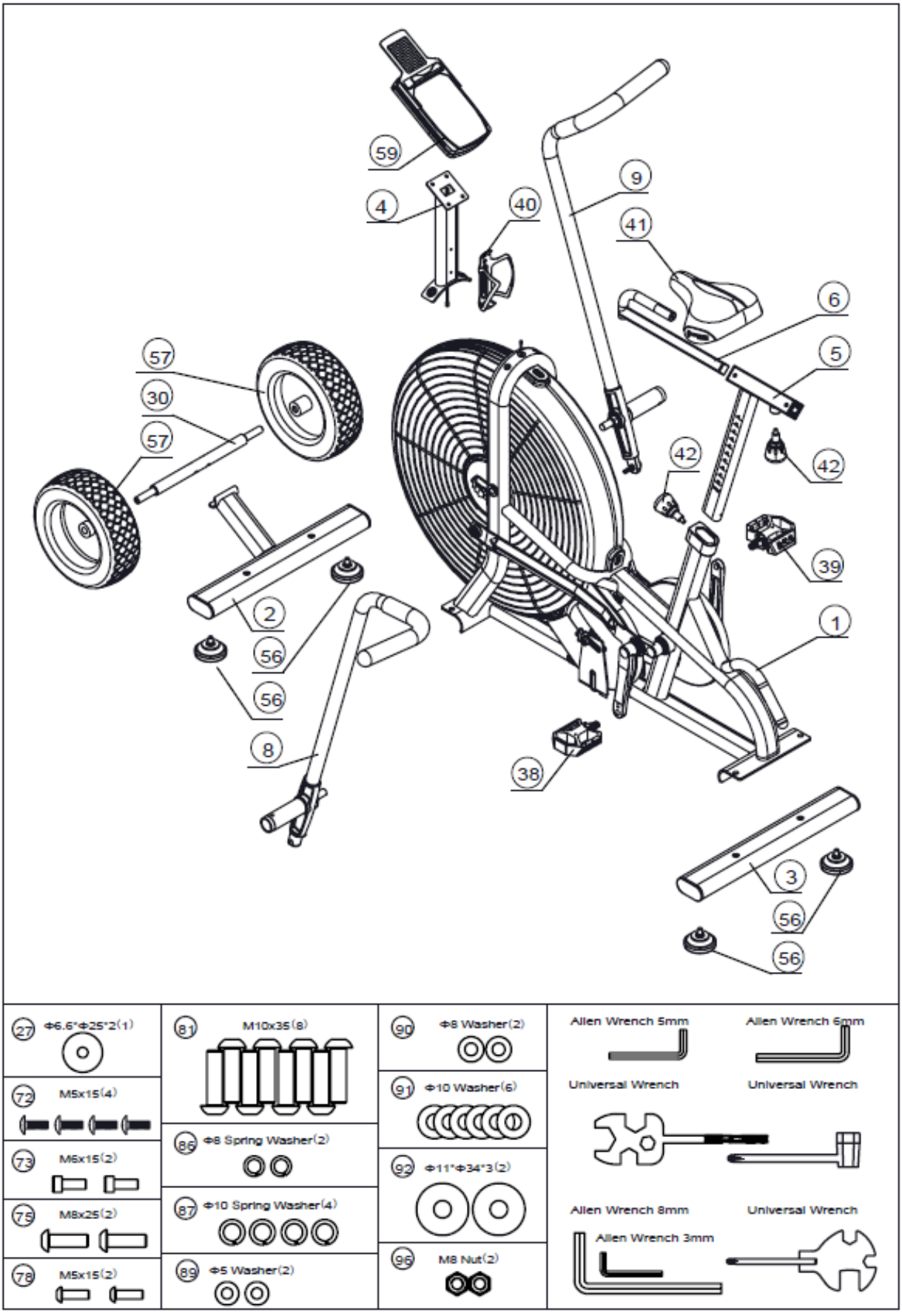

KEY	BOX	DESCRIPTION	QTY
1	1	MAIN FRAME	1
2	1	FRONT STABILIZER	1
3	1	REAR STABILIZER	1
4	1	CONSOLE MAST	1
5	1	SEAT POST ASSEMBLY	1
6	1	SEAT SLIDE ASSEMBLY	1
8	1	LEFT HANDLEBAR ASSEMBLY	1
9	1	RIGHT HANDLEBAR ASSEMBLY	1
30	1	TURF TIRE AXLE	1
38	1	LEFT PEDAL	1
39	1	RIGHT PEDAL	1
40	1	WATER BOTTLE HOLDER KIT	1
41	1	SEAT PAD	1
56	1	POP PIN	2
56	1	LEVELING FOOT	4
57	1	TURF TIRE	2
59	1	CONSOLE	1

STEP 1

A. Remove the four Allen Bolts (76) and two Gray Base Tubes (10) and discard in the trash (for shipping protection only).

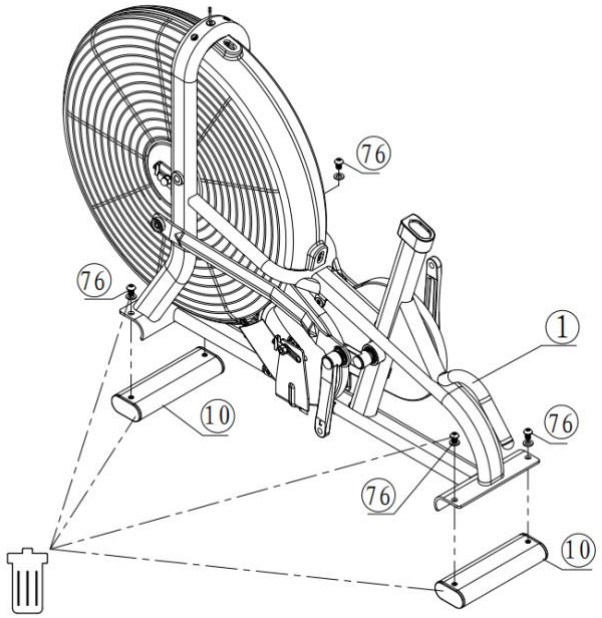

STEP 2

A. Install the four Leveling Feet (56) on the Front Stabilizer (2) and the Rear Stabilizer (C3). Twist into the four outermost holes.

B. Install the Front Stabilizer (2) and the Rear Stabilizer (3) on Main Frame (1), using Allen Bolt M10*35 (81), Spring Washer (87), and Flat Washer (91).

C. Adjust the four Leveling Feet (56) to ensure that the Main Frame (1) is level, then tighten the Thin Nut (97) firmly to the Front Stabilizer (2) and Rear Stabilizer (3).

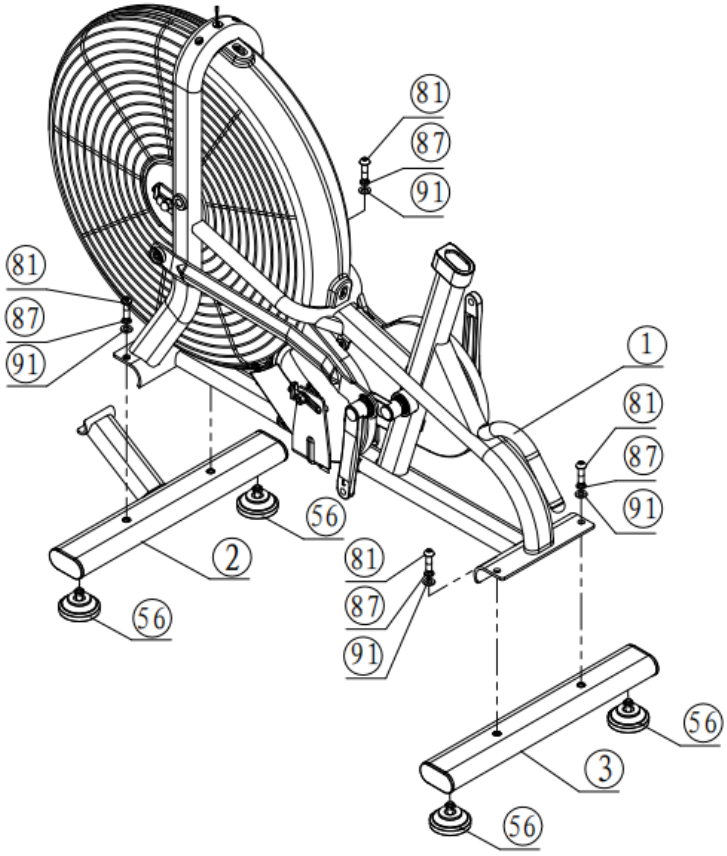

STEP 3

A. Install the Turf Tire Axle (30) on the Front Stabilizer (2), using the Allen Bolt M10*35 (81) and Flat Washer (91).

B. Install the two Turf Tires (57) on the Turf Tire Axle (30), using Big Washer (92) and Allen Bolt M10*35 (81).

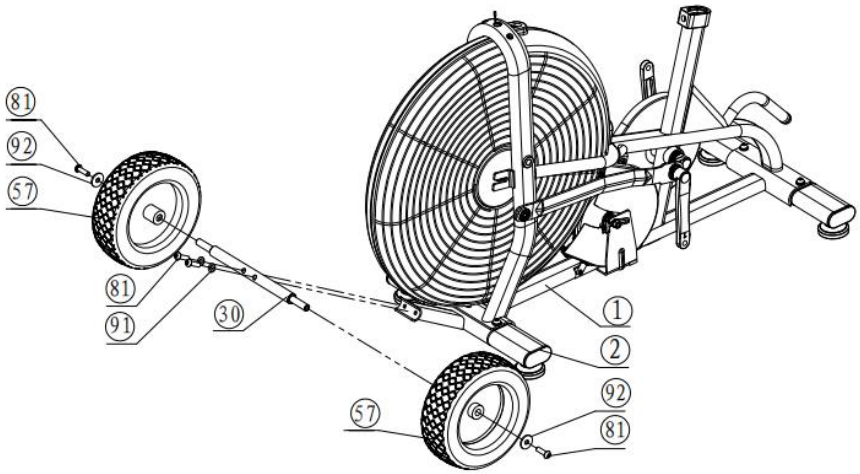

STEP 4

A. Insert the Seat Mast (5) into the Main Frame (1) and secure using the Pop Pin (42). To properly secure the pop pin, once the seat is at the desired height, firmly tighten the knob.

B. Insert the Seat Slide Assembly (6) into the Seat Mast (5). Slide all the way to the back.

C. Screw in the Allen Bolt M6*15 (73) to the lower back of the Seat Slide Assembly (6). Then insert the Pop-Pin Knob (42).

D. Attach the Seat Pad (41) onto the Seat Slide Assembly (6), using the Allen Bolt M6*15 (73) and Big Washer (27). The Collar goes onto the knurling to keep from rotating.

E. Adjust the Seat Pad (41), then firmly tighten the nuts on both side of Seat Pad (41).

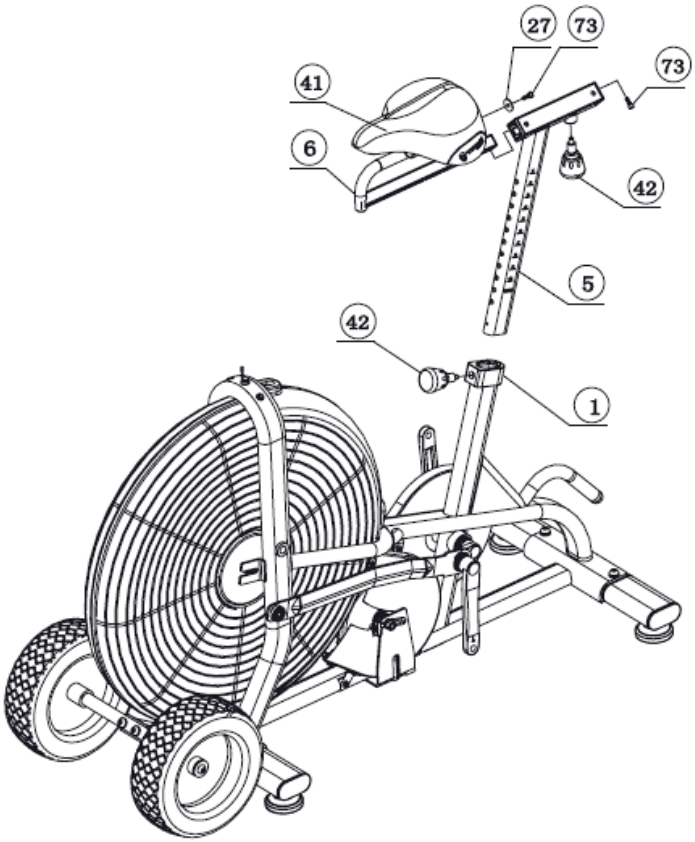

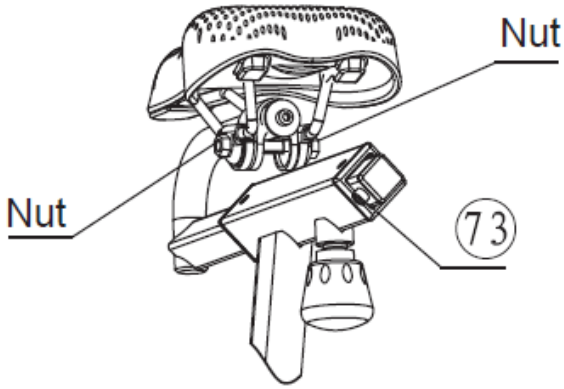

STEP 5

A. Remove the Rubber Grommet (55), expose the Sensor Plug (60), then reinstall Rubber Grommet (55).

B. Carefully connect the Sensor Plug (60) to the Console Plug (61).

C. Install the Console Mast (4) on the Main Frame (1) using Allen Bolt M8*25 (75), Spring Washer (86), and Flat Washer (90).

DO NOT TIGHTEN THE BOLTS UNTIL THE END OF STEP D.

D. Attach Water Bottle Holder (40) onto Console Mast (4), using Flat Washers (89), and Allen Bolts M5*15 (78).

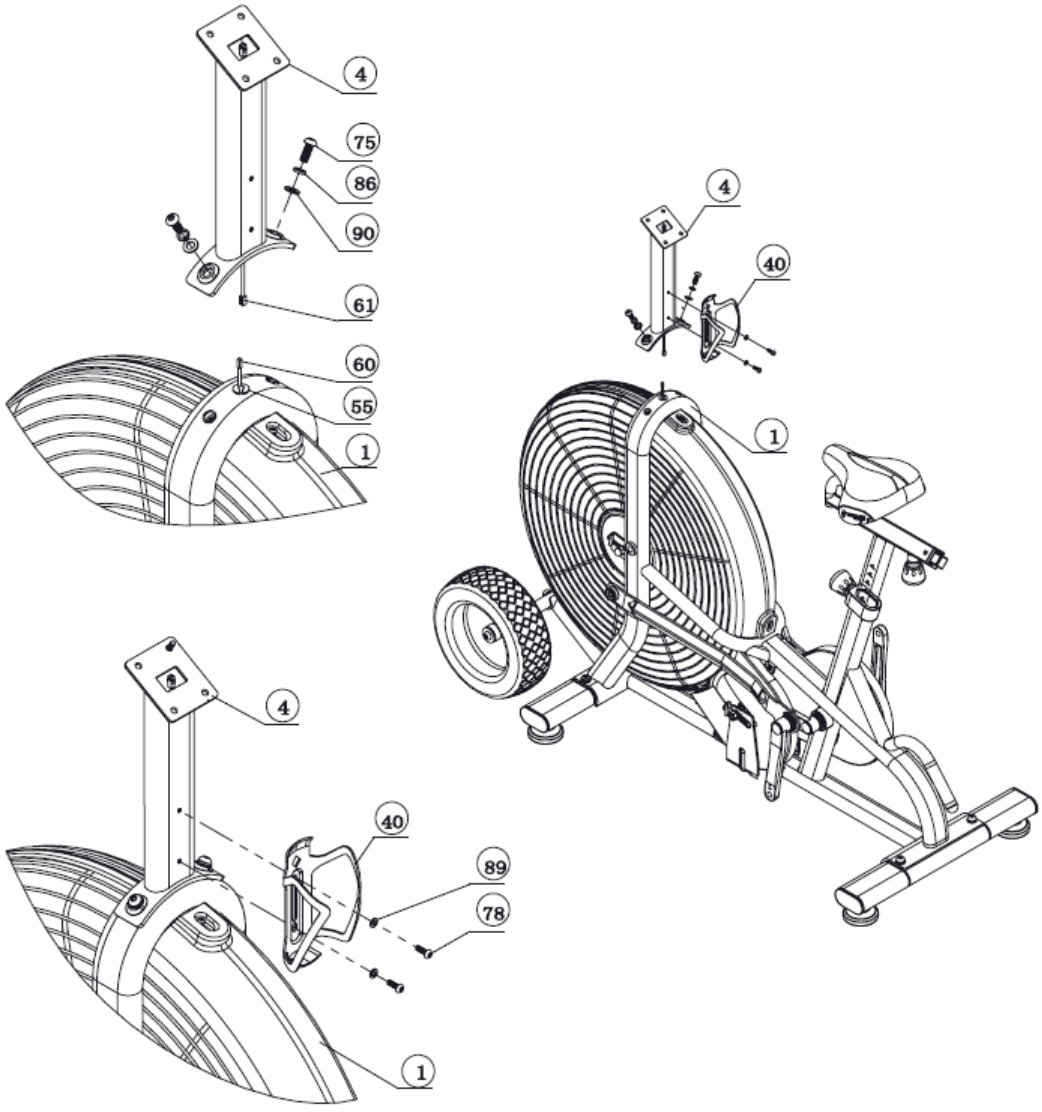

STEP 6

A. Install the Left Handlebar (8) by partially threading the Footrest (33) onto the Main Frame (1). Attach Linkage Arm (7) to the pre-installed Allen Bolt M8*45 (79) on the lower portion of the Left Handlebar using the M8 Locking Nut (96). Finish tightening Footrest (33) to Main Frame (1).

B. Install the Right Handlebar (9) by partially threading the Footrest (33) onto the Main Frame. Attach Linkage Arm (7) to the pre-installed Allen Bolt M8*45 (79) using the M8 Locking Nut (96). Finish tightening Footrest (33) to Main Frame (1).

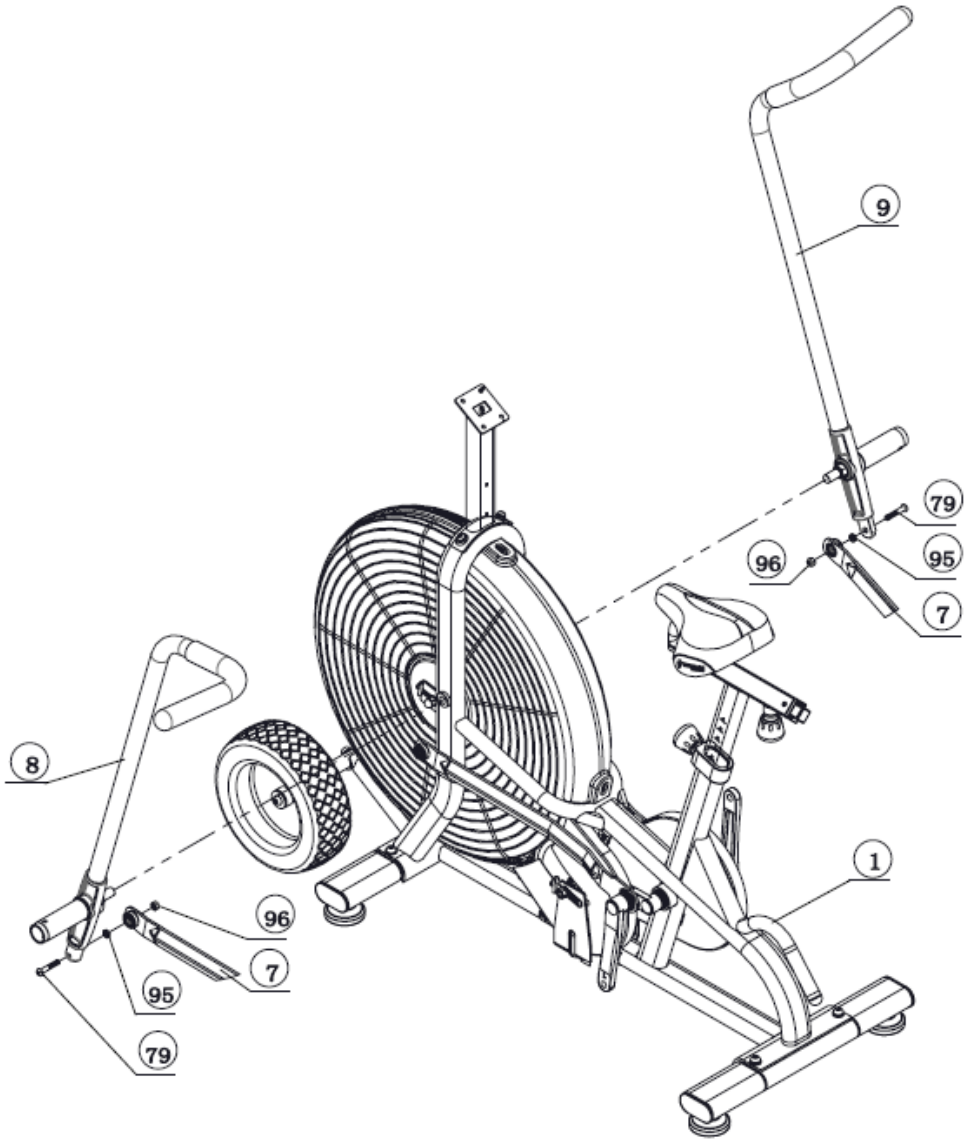

STEP 7

A. Adjust the handles to a parallel position.

B. Remove the pre-existing screws (Button Head Screw M6*20 (72) from the back of the console and pull the tab for the batteries. The console will turn on once you remove the tab.

C. Connect the Console Plug (61) with the back of the Console (59).

D. Install the Console (59) onto the Console Mast (4) by using the Button Head Screw M6*20 (72).

E. Adjust the Console Mast (4) to ensure it is evenly spaced and square to the Main Frame (1) and tighten the two Console Mast bolts to the Main Frame (1).

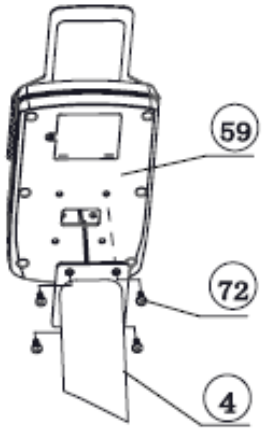

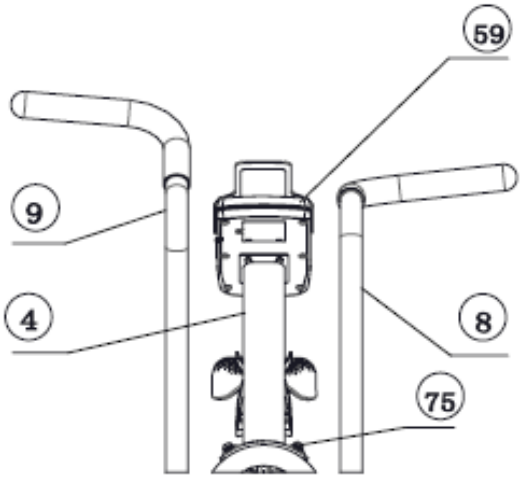

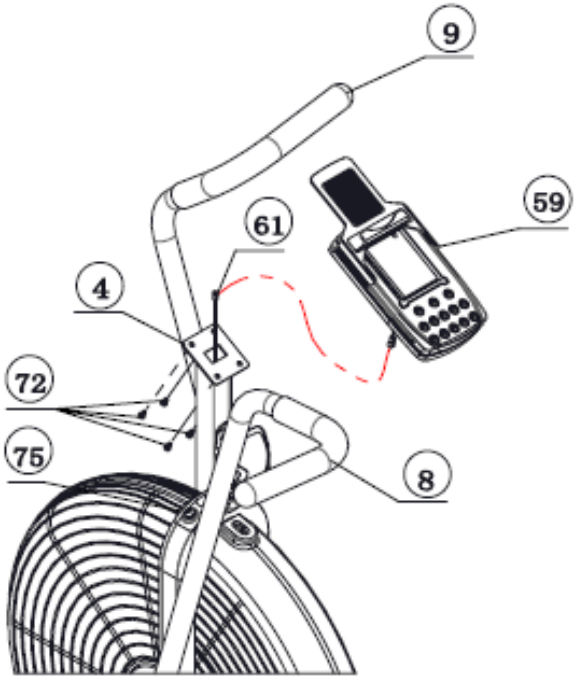

STEP 8

A. Install the Left Pedal (38) onto the Left Crank (34), turning the pedal counterclockwise.

B. Install the Right Pedal (39) onto the Right Crank (35), turning the pedal clockwise.

ATTENTION: Pedals must be installed at a right angle (90-degrees) to the crank. If the pedal is not installed at a right angle the threads may become stripped. Please hand tighten as far as possible before tightening with a tool.

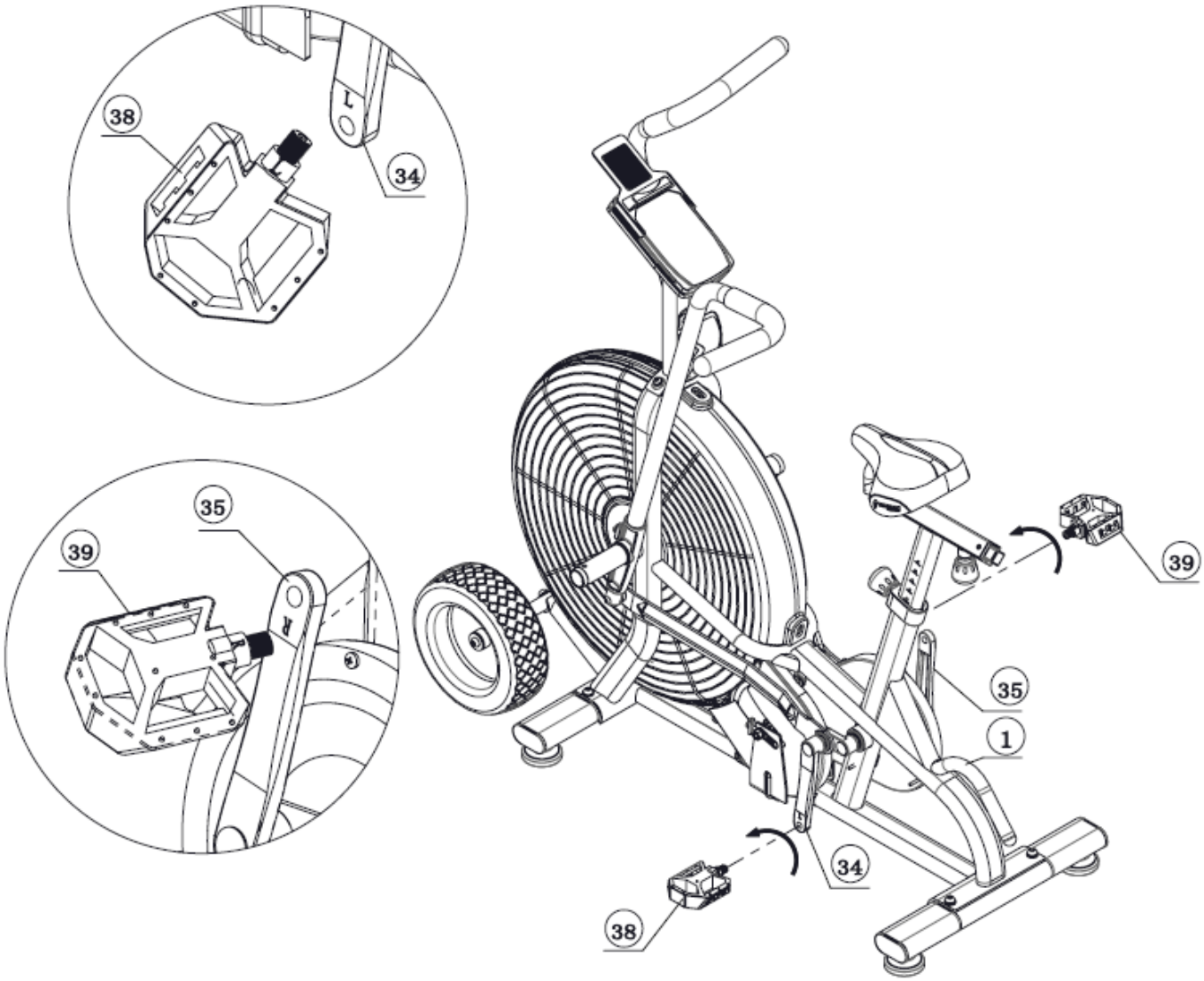

CONSOLE OVERVIEW

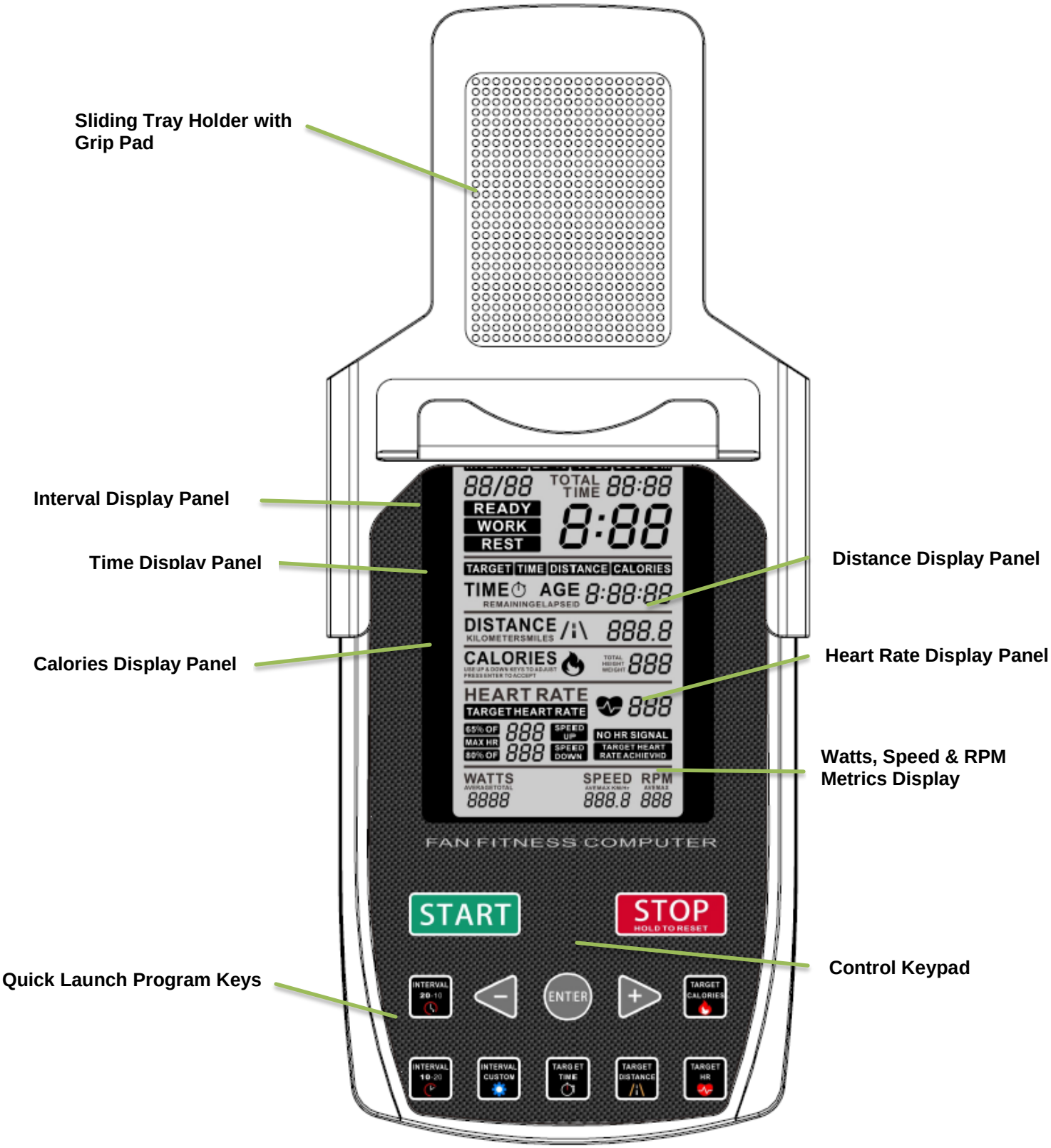

INTERVAL DISPLAY PANEL

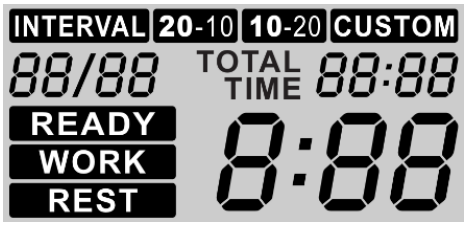

The Interval Display Panel shows all display details for the Interval 20/10, Interval 10/20, and Interval Custom programs.

The upper banner signals which interval program is running as well as when the running interval is a Work or Rest period.

The Total Time display counts the total program run time while the large numeric display counts the Work or Rest segment time.

The 88/88 Display shows the current interval and the total number of intervals in the program.

TARGET TIME, DISTANCE AND CALORIES DISPLAY PANEL

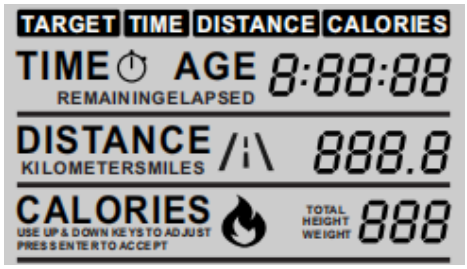

The Target Display Panel tracks Time, Distance, and Calories during all programs. A banner across the top signifies if one of the three Target programs is running.

The Time display alternates between the remaining and elapsed values throughout the program.

Total Distance is displayed in miles or kilometers. The Calories display tracks the number of calories burned during the workout.

WATTS / SPEED / RPM DISPLAY



Watts, Speed, and RPM is displayed during all programs.

Watts are a measure of energy generation and are used to track the amount of work generated at any given time during a workout.

The Speed display posts a value that simulates riding a standard bicycle and is derived from RPM pedal speed. The value is given in miles-per-hour. RPM or revolutions-per-minute is the speed at which the pedal cranks are spinning.

HEART RATE DISPLAY PANEL

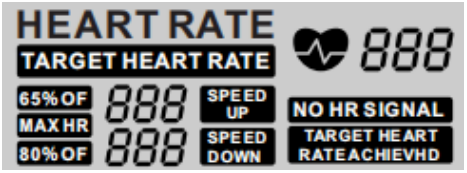

This panel requires a wireless heart rate chest strap (not included) to display the user's heart rate.

When the wireless monitor detects a signal, the user's heart rate is displayed in the three-digit BPM (beats-per-minute) field, and the Heart icon flashes. Conversely, when a signal is not detected, the no signal banner posts and the heart icon does not light.

When the target heart rate program runs, the console helps the user maintain a BPM range to build cardiovascular endurance. The upper and lower values of the target range display next to the 65% of Max HR and 80% of Max HR banners, and the Decrease Speed or Increase Speed banners flash to signal that increased pedal speed is needed to bring the heart rate into the desired range. When the user's heart rate is within the target range, the Target Heart Rate Achieved banner posts.

CONSOLE KEYS



START KEY
The START key launches a program and restarts a paused program.

ENTER KEY
The enter key confirms a value to be entered while adjusting a



STOP KEY
Use the STOP key to end a program.

LEFT/RIGHT ARROW KEYS
The "-"/"+" Arrow keys allow the user to increase and decrease console values and change between miles and kilometers.



PROGRAM QUICK KEYS
The Program Quick keys launch the associated programs immediately.

BATTERY INSTALLATION

The Titan® Fan Bike console operates on four (4) AA batteries. The battery compartment is on the backside of the console.

SLEEP MODE

After a period of inactivity, the console enters the power-saving Sleep Mode. The display switches off, but all previously entered data is saved. To launch the Ready Mode, rotate the pedals or press any button on the console.

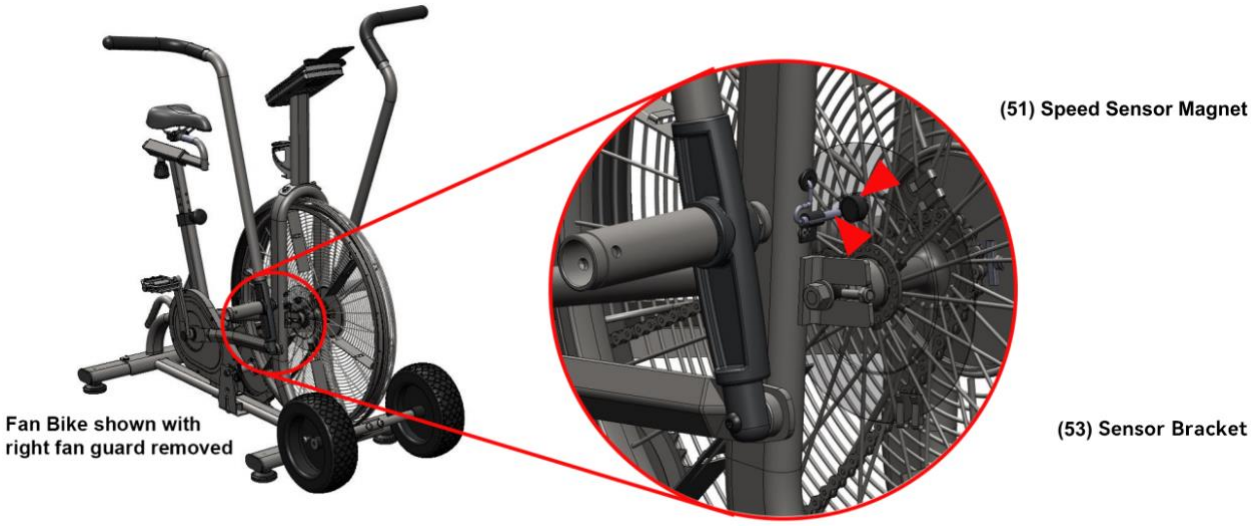

If the speed sensor is too close to the speed sensor magnet, the console will NOT go into Sleep Mode and will beep every five (5) minutes to let you know the console is not in sleep mode. To stop the beeping move the pedals so the speed sensor is away from the speed sensor magnet. This will allow the bike to go into Sleep Mode and eliminate any battery drain.

READY MODE

The Ready Mode is designed to notify the user that the console is powered on and ready to begin a program. The Ready Mode is 10 minutes in length. If no other activity occurs before the Ready Mode period has elapsed, the console will re-enter the Sleep Mode.

RESET PROCESS

To reset all saved settings, press and hold the STOP key for three seconds.

PAUSE MODE

While any program is running, pressing the START key launches the Pause Mode. The onboard beeper sounds every three (3) seconds to serve as a reminder, and the display flashes on and off. If no further input is made, the Pause Mode ends, and the console enters the Ready Mode. To exit the Pause Mode and continue the currently running program, press the START key. To quit the paused program at any time, press the STOP key three (3) seconds to launch the Ready Mode.

PROGRAM OPERATIONS

ELAPSED TIME AND REMAINING TIME SWITCHING

While running a program, the Total Time and Segment Time values switch between elapsed and remaining.

QUICK LAUNCH (NO PROGRAM)

Console will begin counting Time, Distance, and Calories; and display momentary Watts, Speed, and RPM at start of pedaling. No user input is required to activate console.

PROGRAM QUICK LAUNCH

The Quick Launch mode can change the program with the touch of a single key. At any time during the workout, press a Program Quick Key to launch the associated program immediately.

WORKOUT SUMMARY

The Titan® Fan Bike console provides a brief Workout Summary immediately following the completion of the workout session. Press the STOP button, and all workout metrics will be displayed for the workout:

- Total Time
- Total Distance
- Total Calories
- Average Watts
- MAX/AVE Speed
- MAX/AVE RPM
- Max/65%/85% Heart Rate (If Compatible Heart Rate Monitor Is Used- Not Included)

INTERVAL 20/10 AND INTERVAL 10/20 PROGRAMS

The Interval 20/10 and Interval 10/20 programs offer the user a series of eight (8) high-intensity workout intervals with preset time segments. This training protocol is commonly known as High Intensity Interval Training (H.I.I.T.). The program automatically signals the start of each work and rest interval.

INTERVAL 20/10 PROGRAM	**INTERVAL 10/20 PROGRAM**
Number of Intervals: 8	Number of Intervals: 8
Work Interval Length: 20 seconds	Work Interval Length: 10 seconds
Rest Interval Length: 10 seconds	Rest Interval Length: 20 seconds
Interval Time: 3 minutes	Interval Time: 3 minutes

LAUNCH: To start the Interval 20/10 or Interval 10/20 programs, press the appropriate program key.

RUN: The time counts down from three minutes to signal the start of each work interval.

END: The program runs until the last of the rest segments end. To end the program at any time, press the STOP key. The Workout Summary launches and posts a record of the workout data.

INTERVAL CUSTOM PROGRAM

The Interval Custom program is like the Interval 20/10 Program, except the user can set the length of the work and rest intervals and the total number of intervals.

LAUNCH: Press the Interval Custom program key.

SETUP: When running the Interval Custom program for the first time (or after the console has been reset), the user is required to enter the total number of intervals. Adjust the displayed value by pressing the "+" or "-" keys, followed by the ENTER key to confirm. The default work interval is then displayed. Adjust the display value with the "+" or "-" keys. Confirm by pressing ENTER. The default rest interval will display. Adjust the value and confirm by pressing ENTER.

RUN: The timer counts down from three minutes to signal the start of each work interval, and the program runs immediately.

END: The program ends automatically when all interval segments have run. To complete the program at any time, press the STOP key. The Workout Summary launches and displays a record of the workout data.

TARGET TIME, TARGET DISTANCE, AND TARGET CALORIES PROGRAMS

The Target Time, Target Distance, and Target Calories programs each operate identically. In each program, the user can define a set value, and the program will continue until that goal has been achieved.

LAUNCH: From the Off/ Reset position, press Enter key to confirm age 30. Press the desired target key – Target Time, Target Distance, or Target Calories. Use the arrow keys to get to desired value and press start. The console will count till your programmed goal is achieved and signal completion with a beep.

SETUP: When running the Target programs for the first time (or after the console has been reset), the display flashes with the default value. Adjust the displayed value by pressing the "+" or "-" keys,

followed by the ENTER key to confirm. The program begins automatically.

RUN: The display fields light and begin to track the progress of the user. If the Target Time program has been selected, the time target begins to count down. If the Target Distance program is running, the console tracks the progress toward that goal. When the Target Calories program has been selected, the console tracks calories.

END: The program ends automatically when the selected target is achieved. To complete the program at any time, press the STOP key. The Workout Summary launches and displays a record of the workout data.

TARGET HEART RATE PROGRAM

The Target Time, Target Distance, and Target Calories programs each operate identically. In each program, the user can define a set value, and the program will continue until that goal has been achieved.

LAUNCH: From the Off/ Reset position, press Enter key to confirm age 30. Press the desired target key – Target Time, Target Distance, or Target Calories. Use the arrow keys to get to desired value and press start. The console will count till your programmed goal is achieved and signal completion with a beep.

SETUP: When running the Target programs for the first time (or after the console has been reset), the display flashes with the default value. Adjust the displayed value by pressing the "+" or "-" keys, followed by the ENTER key to confirm. The program begins automatically.

MILE / KILOMETER: To change to preferred miles or kilometer setting, press and hold both "+" and "-" arrow keys until the setting changes.

RUN: The display fields light and begin to track the progress of the user. If the Target Time program has been selected, the time target begins to count down. If the Target Distance program is running, the console tracks the progress toward that goal. When the Target Calories program has been selected, the console tracks calories.

END: The program ends automatically when the selected target is achieved. To complete the program at any time, press the STOP key. The Workout Summary launches and displays a record of the workout data.

USING THE WIRELESS HEART RATE RECEIVER

In general, a Wireless Heart Rate Chest Strap (not included) is the most accurate method of detecting and monitoring a heart rate signal. Occasionally, certain factors can negatively affect the precise transmission of the heart rate signal. Wi-Fi networks, cordless telephones, and large electrical appliances may degrade or corrupt the signal so that the rate appears erratic or impossibly high. The only remedy for such a symptom is to isolate the unit from potential disturbances. Additionally, a person's body chemistry or lack of sweat can prevent the chest strap from providing a strong or accurate heart rate signal. The TITAN® Fan Bike is equipped with a wireless heart rate receiver to detect an HR signal being transmitted by a wireless chest strap (not included).

For the console to detect and display your heart rate wirelessly, four (4) conditions must be present:

- A compatible heart rate chest strap transmitter must be functioning and worn. For the proper function of the chest strap, please refer to the manufacturer's instructions. Non-coded transmitters such as the Polar Heart Rate Monitors are examples of wireless chest straps that

are compatible with this unit.
- The unit must be turned on.
- A workout program must be running.
- The user is within three (3) feet of the console.

CALCULATED MAXIMUM HEART RATE AND TARGET TRAINING ZONE

Your target heart rate is calculated from your age. It is essential to work within a safe and productive zone. If the exercise intensity is too low or too high, only modest gains are achieved in strength and cardiovascular fitness. Conversely, if the workout intensity is too high, injury or fatigue may slow the progression of exercise goals as the body needs time to recover.

NOTE: It is most useful to train at a heart rate between 65% and 80% of your maximum heart rate. Maximum heart rate is calculated as a percentage of your maximum heart rate (estimated as 220 BPM minus your age).

To calculate your maximum heart rate and find the appropriate target training zone, the console uses the following formulas. Example shows 35-year-old user:

- 220 - 35 = 185 BPM (220 - Age= Calculated Maximum Heart Rate in BPM)
- 0.65 x 185 = 120 BPM (65% of 185 BPM [Calculated Maximum Heart Rate] = 120 BPM)
- 0.80 x 185 = 148 BPM (80% of 185 BPM [Calculated Maximum Heart Rate] = 148 BPM)

Based on these calculations, this user's recommended heart rate training zone would be between 120 BPM and 148 BPM. It will be displayed on the console when using Target Heart Rate with a compatible heart rate chest strap transmitter (not included).

FULL PARTS LIST / EXPLODED VIEW

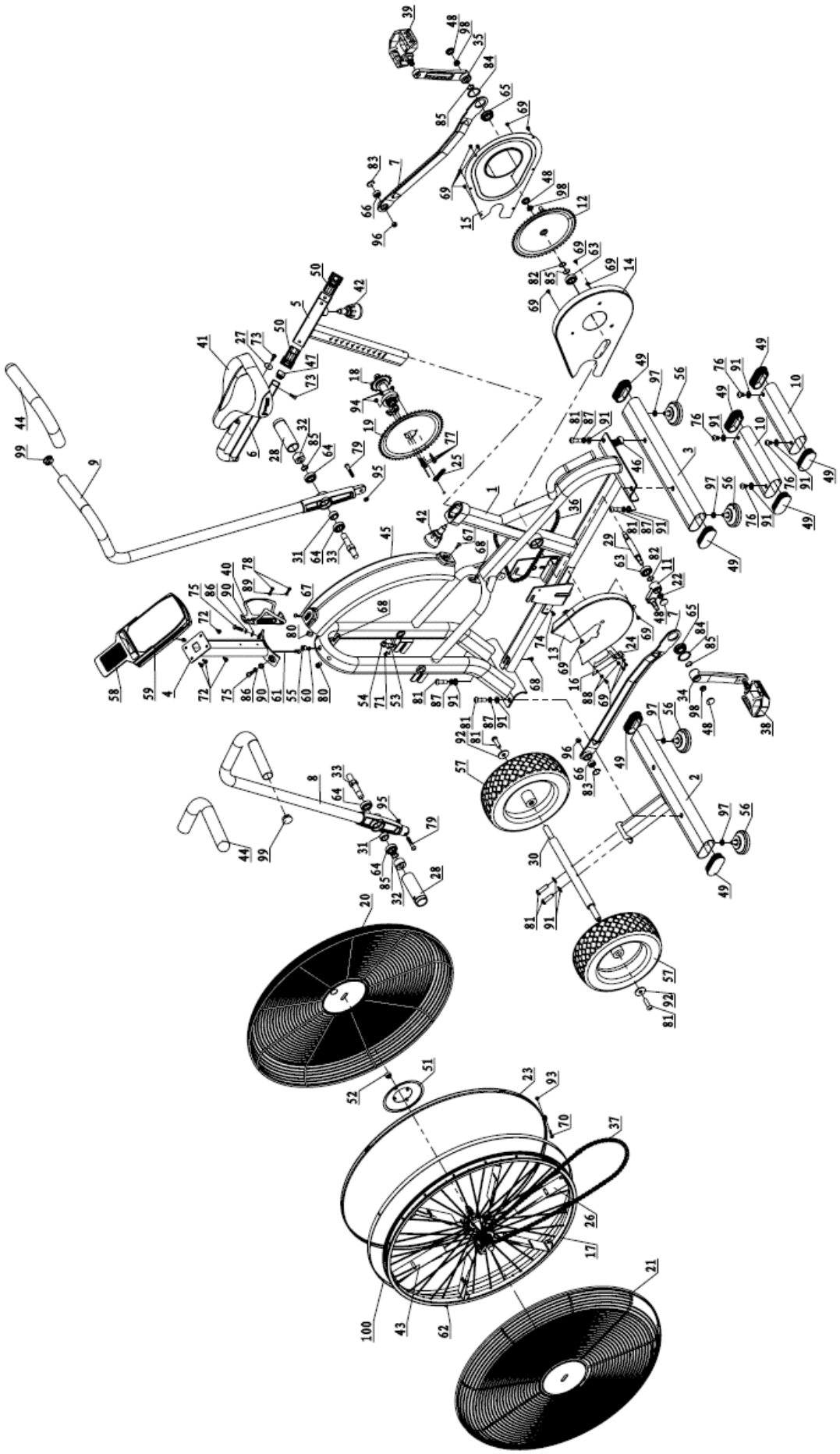

KEY	BOX	DESCRIPTION	QTY	KEY	BOX	DESCRIPTION	QTY
(1)	1	MAIN FRAME	1	(51)	1	SPEED SENSOR MAGNET AND PLATE	1
(2)	1	FRONT STABILIZER	1	(52)	1	SPEED SENSOR MAGNET SEAT	1
(3)	1	REAR STABILIZER	1	(53)	1	SENSOR BRACKET	1
(4)	1	CONSOLE MAST	1	(54)	1	PVC CABLE PLUG	1
(5)	1	SEAT POST	1	(55)	1	RUBBER GROMMET	1
(6)	1	SEAT SLIDE RAIL	1	(56)	1	LEVELING FOOT	4
(7)	1	LINKAGE ARM	2	(57)	1	TURF TIRE	2
(8)	1	LEFT HANDLEBAR	1	(58)	1	CELL PHONE HOLDER	1
(9)	1	RIGHT HANDLEBAR	1	(59)	1	CONSOLE	1
(10)	1	GRAY BASE TUBE (FOR SHIPPING ONLY)NO USE FOR ASSEMBLY)	2	(60)	1	SENSOR PLUG	1
(11)	1	BELL CRANK	1	(61)	1	CONSOLE PLUG	1
(12)	1	CHAIN WHEEL	1	(62)	1	RIVET Φ15*12	6
(13)	1	FRONT CHAINGUARD	1	(63)	1	6003ZZ BALL BEARING	2
(14)	1	CHAIN GUARD	1	(64)	1	6003ZZ BALL BEARING	4
(15)	1	REAR CHAINGUARD	1	(65)	1	6202RS BALL BEARING	2
(16)	1	BIG L BRACKET FOR CHAINGUARD	1	(66)	1	KNUCKLE BEARING	2
(17)	1	FAN WHEEL ASSEMBLY	1	(67)	1	SELF TAPPING SCREW 4.8*20	2
(18)	1	MID HUB ASSEMBLY	1	(68)	1	SELF TAPPING SCREW 4.8*15	3
(19)	1	CHAIN WHEEL	1	(69)	1	BUTTON HEAD SCREW M5*6	15
(20)	1	RIGHT FAN CAGE	1	(70)	1	BUTTON HEAD SCREW M5*30	1
(21)	1	LEFT FAN CAGE	1	(71)	1	BUTTON HEAD SCREW M5*10	1
(22)	1	FLANGE NUT M10*1.25 L	1	(72)	1	BUTTON HEAD SCREW M5*15	4
(23)	1	FAN CAGE COVER	1	(73)	1	ALLEN BOLT M6*15	2
(24)	1	SMALL L BRACKET FOR CHAINGUARD	1	(74)	1	ALLEN BOLT M6*12	1
(25)	1	POSITIONING PLATE	1	(75)	1	ALLEN BOLT M8*25	2
(26)	1	FAN BLADE	6	(76)	1	ALLEN BOLT M10*15 (FOR SHIPPING ONLY)	4
(27)	1	BIG WASHER	1	(77)	1	ALLEN BOLT M6*25	3
(28)	1	FOOT PEG	2	(78)	1	ALLEN BOLT M5*15	2
(29)	1	PEDAL SHAFT	1	(79)	1	ALLEN BOLT M8*45	2
(30)	1	TURF TIRE AXLE	1	(80)	1	TUBULAR RIVET M8	2
(31)	1	BEARING SLEEVE	2	(81)	1	ALLEN BOLT M10*35	8

KEY	BOX	DESCRIPTION	QTY	KEY	BOX	DESCRIPTION	QTY
(32)	1	BUSHING	2	(82)	1	CLIP Φ17	2
(33)	1	FOOTREST	2	(83)	1	CLIP Φ22	2
(34)	1	LEFT CRANK	1	(84)	1	CLIP Φ35*1.2	2
(35)	1	RIGHT CRANK	1	(85)	1	WAVE WASHER Φ17*Φ19*0.5	9
(36)	1	SHORT CHAIN	1	(86)	1	SPRING WASHER Φ8	2
(37)	1	LONG CHAIN	1	(87)	1	SPRING WASHER Φ10	4
(38)	1	LEFT PEDAL	1	(88)	1	FLAT WASHER M5(Φ5.5*Φ10*1)	2
(39)	1	RIGHT PEDAL	1	(89)	1	FLAT WASHER M5(Φ5.5*Φ10*1)	2
(40)	1	WATER BOTTLE HOLDER KIT	1	(90)	1	FLAT WASHER Φ9*Φ16*1.6	2
(41)	1	SEAT PAD	1	(91)	1	FLAT WASHER Φ11*Φ20*2	10
(42)	1	POP PIN	2	(92)	1	BIG WASHER Φ11*Φ34*3	2
(43)	1	PVC TUBE	6	(93)	1	NYLON NUT M5	1
(44)	1	PVC HANDLE GRIP	2	(94)	1	NYLON NUT M6	3
(45)	1	PP WIND SHIELD	1	(95)	1	THIN NUT M8	2
(46)	1	PLUG	1	(96)	1	LOCK NUT M8	2
(47)	1	PLUG	1	(97)	1	THIN NUT M10	4
(48)	1	END CAP FOR CRANK	4	(98)	1	FLANGE NUT M10*1.25 R	3
(49)	1	PLUG	8	(99)	1	PE Hole Plug	2
(50)	1	SEAT SLIDE RAIL SLEEVE	2	(100)	1	Single Sided Foam Tape	1

ACKNOWLEDGEMENT OF RISK AND RELEASE OF LIABILITY

The use of any equipment, including this one, involves the potential risk of injury. Apart from any warranty claim that might be presented for a claimed defect in material or workmanship of the product, you accept and assume full responsibility for any and all injuries, damages (both economic and non-economic), and losses of any type, which may occur, and you fully and forever release and discharge Titan, its insurers, employees, officers, directors, associates, and agents from any and all claims, demands, damages, rights of action, or causes of action, present or future, whether the same be known or unknown, anticipated, or unanticipated, resulting from or arising out of the use of said equipment.

This equipment must be used with care by capable and competent individuals under supervision,

WARNING



Heavy object. Use lifting aids and proper lifting techniques when moving.



Choking hazard. Small parts – Please exercise caution if small children or pets are present.



Sharp objects may be involved. Use precaution and protection.

TITAN LIMITED WARRANTY: TERMS, EXCLUSIONS AND LIMITATIONS OF REMEDIES

This product comes with a one (1) year limited warranty that can be found at www.titan.fitness/warranty.html Please review the same for all details regarding the Titan Limited Warranty.

THE TITAN LIMITED WARRANTY FOUND AT WWW.TITAN.FITNESS/WARRANTY IS EXCLUSIVE AND IS IN LIEU OF ALL OTHER WARRANTIES, EXPRESS OR IMPLIED, INCLUDING ANY IMPLIED WARRANTY OF MERCHANTABILITY AND/OR FITNESS FOR A PARTICULAR PURPOSE, EACH OF WHICH IS HEREBY DISCLAIMED.



NEED HELP? CONTACT US FIRST.

1-888-410-1503

info@titan.fitness
www.titan.fitness

© 2024 Titan Brands