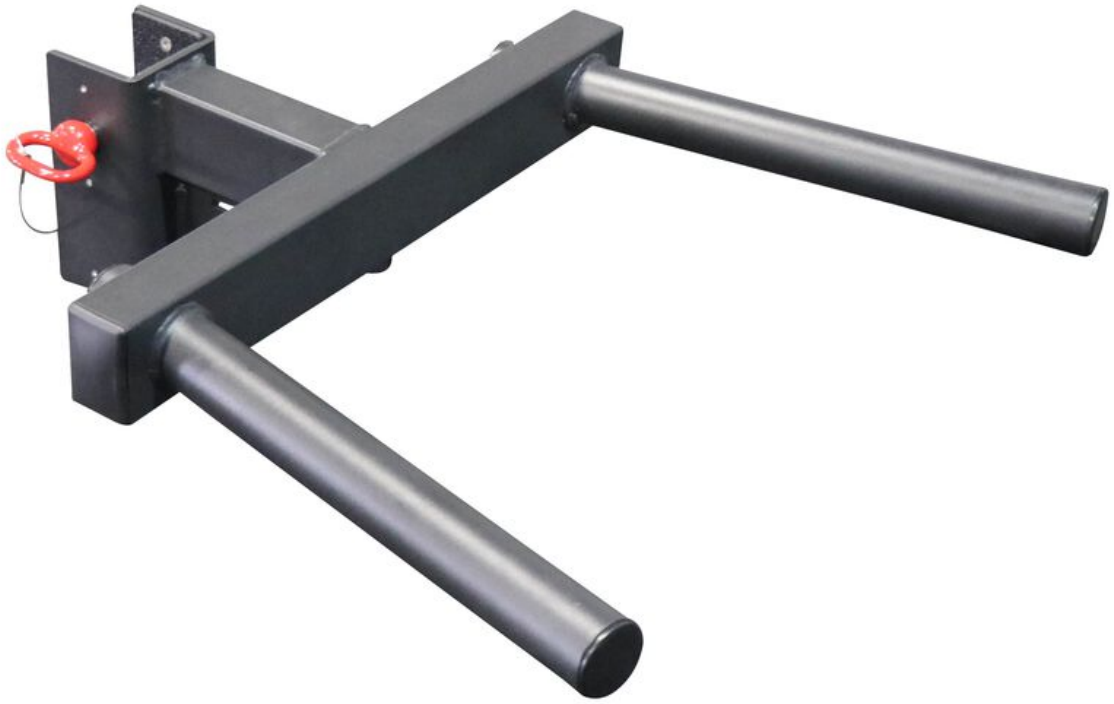

OWNER'S MANUAL

MPN(s): T3YDIP

SKU(s): 400134

UPC(s): 049008265141

PARTS DIAGRAM / EXPLODED VIEW

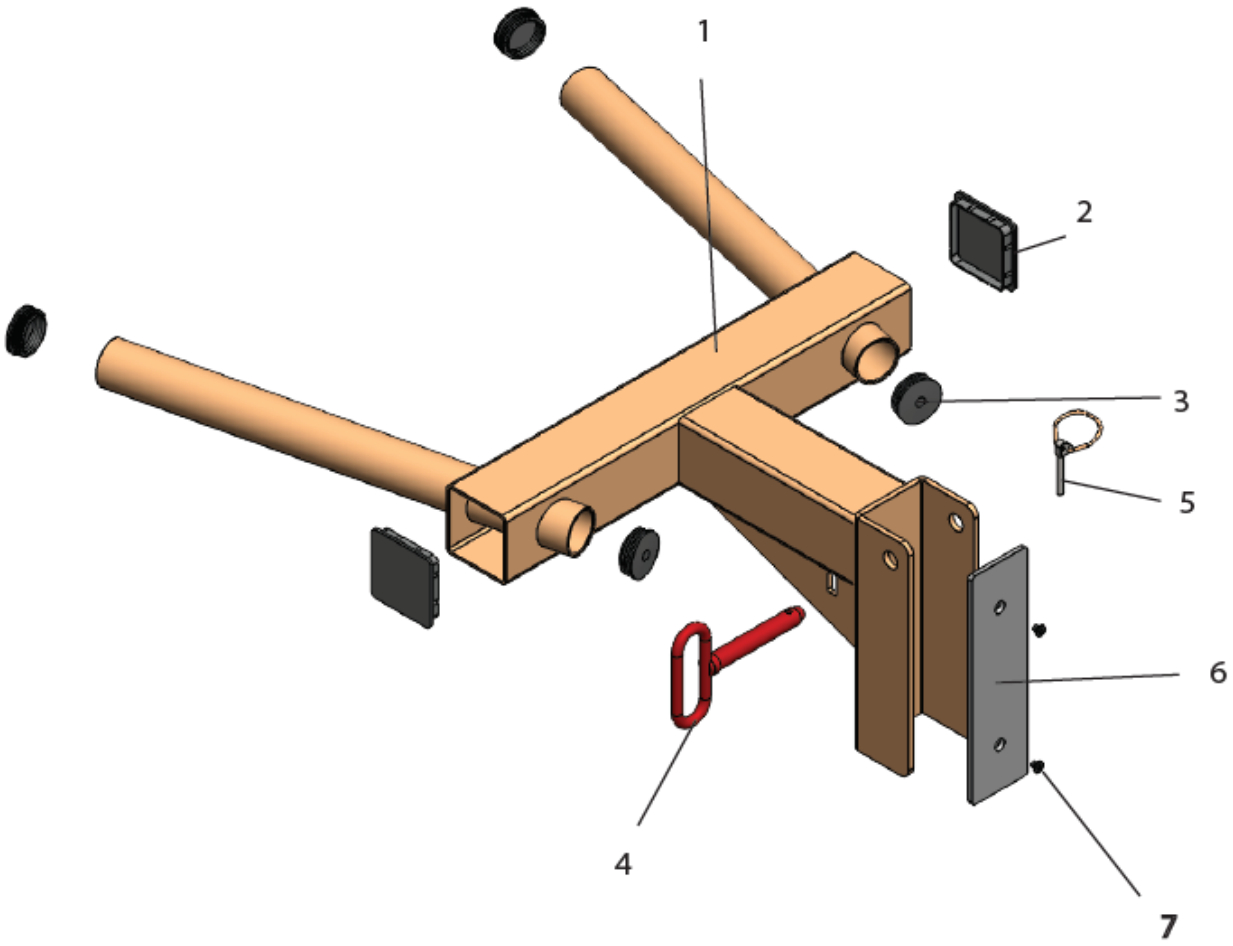

KEY	DESCRIPTION	QTY	KEY	DESCRIPTION	QTY
1	FRAME	1	5	RETENTION PIN	1
2	SQUARE PLASTIC END CAP	2	6	UHMW LINER	1
3	ROUND PLASTIC END CAP	4	7	LINER SCREW	2
4	LOCKING PIN	1			

ASSEMBLY INSTRUCTIONS

- No Assembly Required

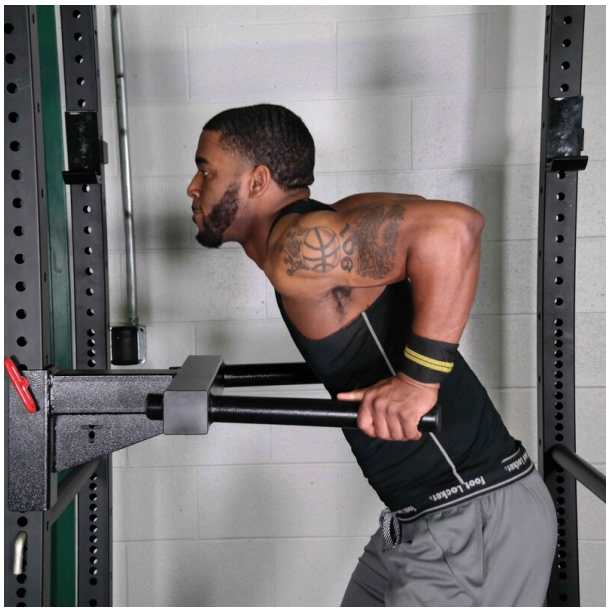

This concludes the T3YDIP Owner's Manual.

If applicable to your product, make sure to tighten all nut-and-bolt combinations before use.

Enjoy!

DISCLAIMER

This equipment must be used with care by capable and competent individuals under supervision, if necessary.

The use of any fitness equipment, including this one, involves the potential risk of injury. You accept and assume full responsibility for any and all injuries, damages (both economic and non-economic), and losses of any type, which may occur, and you fully and forever release and discharge Titan, its insurers, employees, officers, directors, associates, and agents from any and all claims, demands, damages, rights of action, or causes of action, present or future, whether the same be known or unknown, anticipated, or unanticipated, resulting from or arising out of the use of said equipment.

TITAN MAKES NO WARRANTY WHATSOEVER WITH RESPECT TO THE EQUIPMENT, INCLUDING ANY WARRANTY OF MERCHANTABILITY OR WARRANTY OF FITNESS FOR A PARTICULAR PURPOSE, WHETHER EXPRESS OR IMPLIED BY LAW, COURSE OF DEALING, COURSE OF PERFORMANCE, USAGE OF TRADE OR OTHERWISE. BUYER ASSUMES ALL LIABILITY IN USE OF THE EQUIPMENT.

NEED HELP?

CONTACT US FIRST.

1 (800) 605-8241

info@titandistributorsinc.com / www.titan.fitness

Business Hours: Monday–Friday • 8:00 a.m.–5:00 p.m. (CT)