Group Exercise LifeCycle Bike Base

GEC-ALLLX-03

Parts Manual

2/5/2024 21:56:29 PM

LifeFitness
WHAT WE LIVE FOR

Table of Contents

Base Electronics....3
Cable Management....4
Drive System - Drive Belt, Crankshaft, Crank and Pedal....5
Drive System - Flywheel and Hub Assembly....6
Drive System - Idler Assembly....7
Handlebar Mechanism....8
Miscellaneous....9
Seat Mechanism....10
Shrouds, Covers, and Gaskets....11
Stabilizer Assembly....12
Wiring....13

Base Electronics

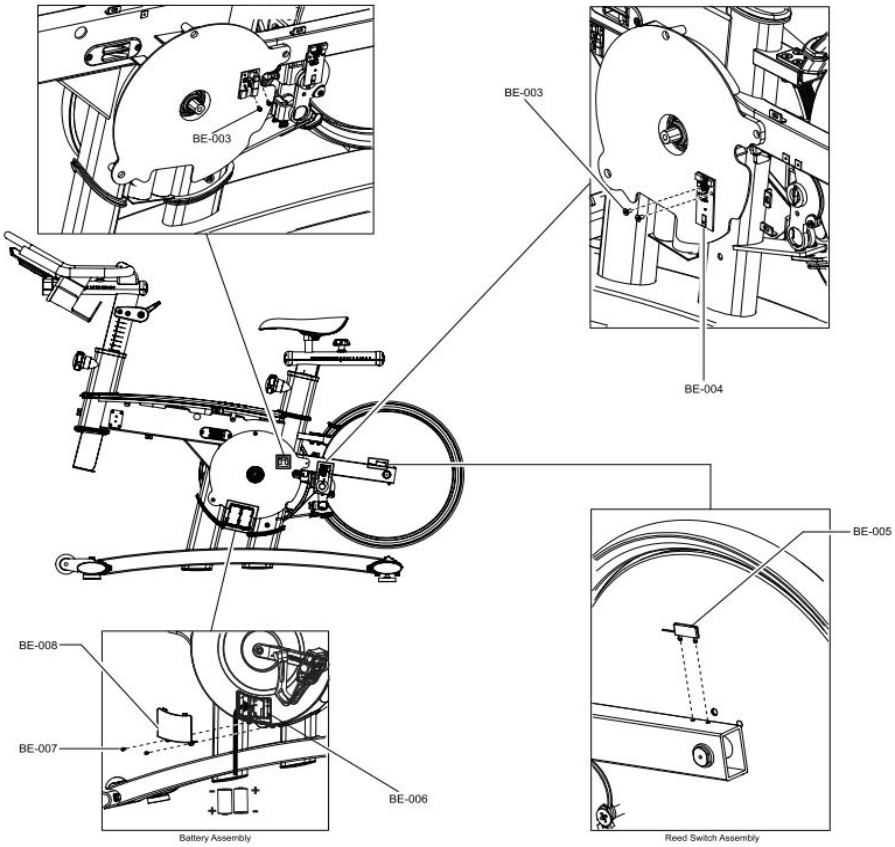

Ref #	Part Number	Qty	Description
BE-002	9479801	1	JUNCTION BOARD; COATED
BE-003	9094401	4	Tapping screw DIN 7049-ST2.9x9.5-C-H-N
BE-004	9096801	1	PCB SENSOR BOARD
BE-005	9079501	1	REED SWITCH MODULE ASSEMBLY
BE-006	9096901	1	BATTERY BOX
BE-007	9095301	2	ISO 4762 M4x10 --- 6N
BE-008	9075202	1	BATTERY COVER V2

Cable Management

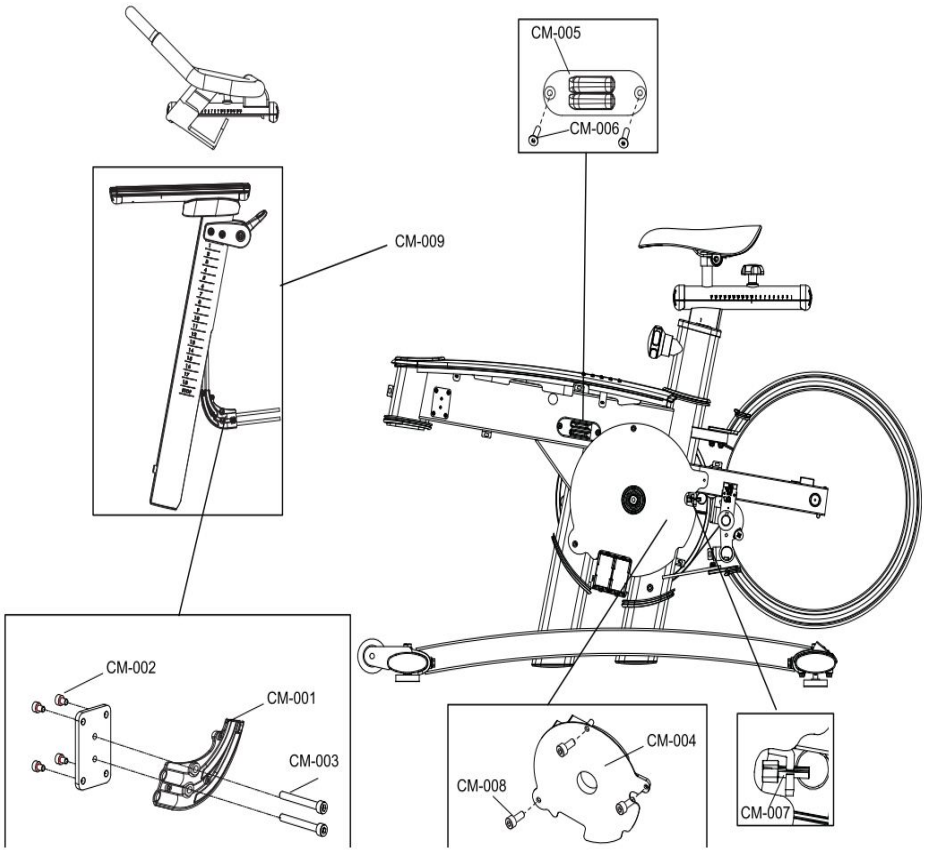

Ref #	Part Number	Qty	Description
CM-001	9177301	1	CABLE GUIDE ASSEMBLY SVC
CM-002	9093701	4	ISO 4762 M4 x 10 --- 10N
CM-003	9176601	2	ISO 4762 M5 X 45 --- 22N
CM-004	9088902	1	GX CABLE SHIELD V2
CM-005	9073201	1	CABLE EXIT
CM-006	9176501	2	ISO 10642 - M4 X 16 --- 16N
CM-007	9088801	1	BRAKE CABLE ADJUSTMENT NUT
CM-008	9095301	3	ISO 4762 M4x10 --- 6N
CM-009	9171202	1	ASSY; HANDLEBAR POST INC CABLES; CHGR

Drive System - Drive Belt, Crankshaft, Crank and Pedal

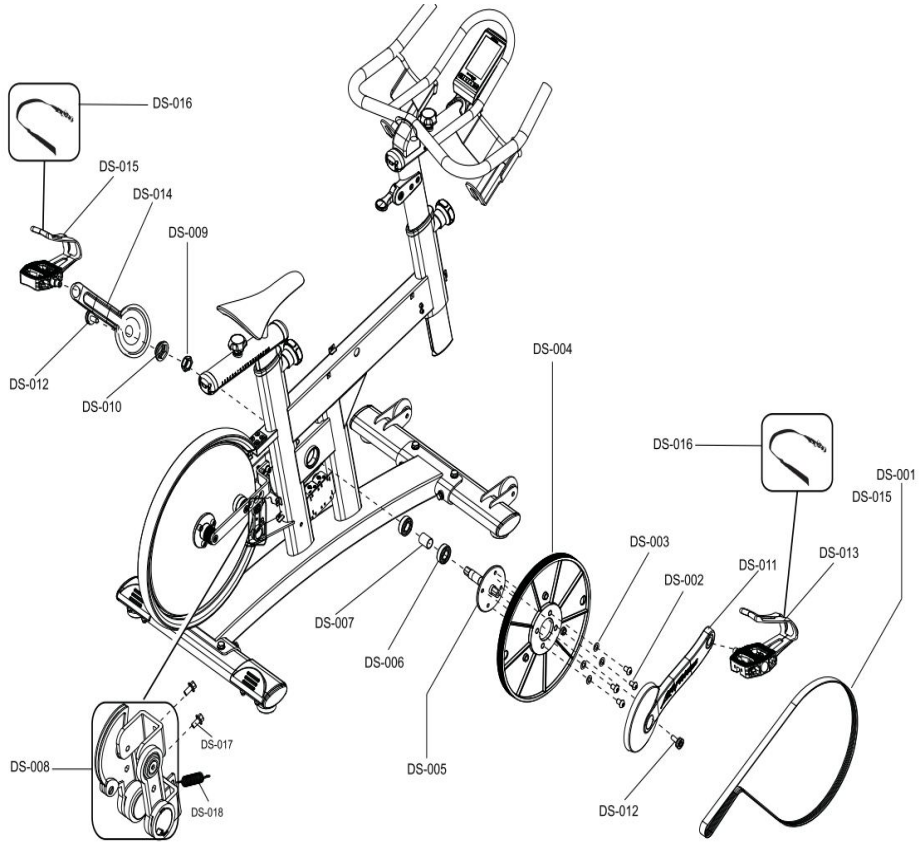

Ref #	Part Number	Qty	Description
DS-001	9073301	1	
DS-002	9094002	4	SCREW: M10 X 16, FLTHD
DS-004	9072302	1	PULLEY: DRIVE, GX
DS-005	9083102	1	WELDMENT; CRANKSHAFT GX 03
DS-006	9071601	2	CRANKSHAFT/IDLER BEARING
DS-007	9072101	1	CRANK BEARING SPACER
DS-008	9073401	1	MAGNETIC BRAKE ASSEMBLY
DS-009	9087801	1	CRANKSHAFT NUT
DS-010	9087901	1	CRANKSHAFT NUT COVER
DS-011	9173902	1	CRANK ARM RT; GX; CHGR
DS-012	9072202	2	SCREW; GX CRANK; COATED
DS-013	9097602	1	PEDAL ASSY; RIGHT 03
DS-014	9072402	1	CRANK ARM LT; GX; CHGR
DS-015	9097502	1	PEDAL ASSY; LEFT 03
DS-016	9171301	2	STRAP, PEDAL
DS-017	9177201	2	ISO 4162 - M6 x 12 x 12-N
DS-018	9098301	1	MAGNETIC BRAKE SPRING

Drive System - Flywheel and Hub Assembly

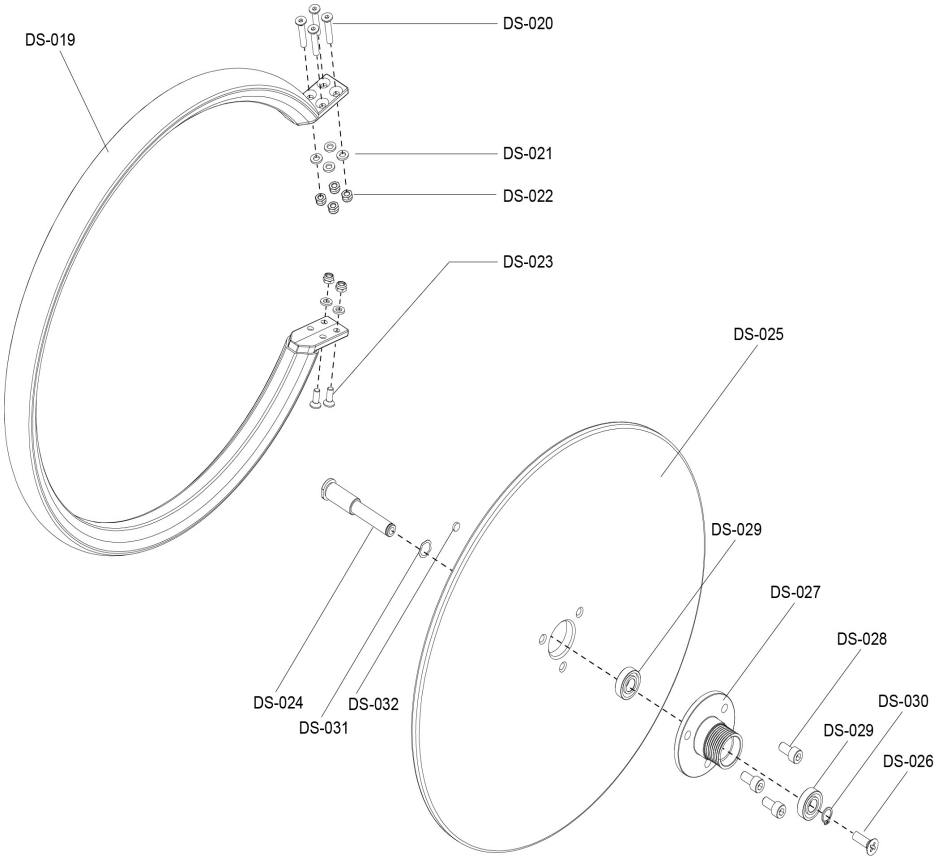

Ref #	Part Number	Qty	Description
DS-019	9066701	1	FLYWHEEL GUARD
DS-020	9091901	4	ISO 10642 - M6 X 35 --- 35N
DS-022	9096401	6	ISO 10511-M6-N
DS-023	9091801	2	ISO 10642 - M6 X 16 --- 16C
DS-024	9071301	1	FLYWHEEL SHAFT
DS-025	9070801	1	FLYWHEEL ASSEMBLY
DS-026	9095101	1	ISO 7046-1 - M8 X 25 - Z --- 25N
DS-027	9071201	1	FLYWHEEL FLANGED HUB
DS-028	9096001	1	SCREW, ISO 4762 M8 X 16L, FLYWHEEL HUB
DS-029	9071001	1	BALL BEARING, 6001, FLYWHEEL, GX
DS-030	9095201	1	Circlip DIN 471 - 12 x 1
DS-031	9087401	1	WAVE WASHER, FLYWHEEL
DS-032	9087501	1	CADENCE MAGNET

Drive System - Idler Assembly

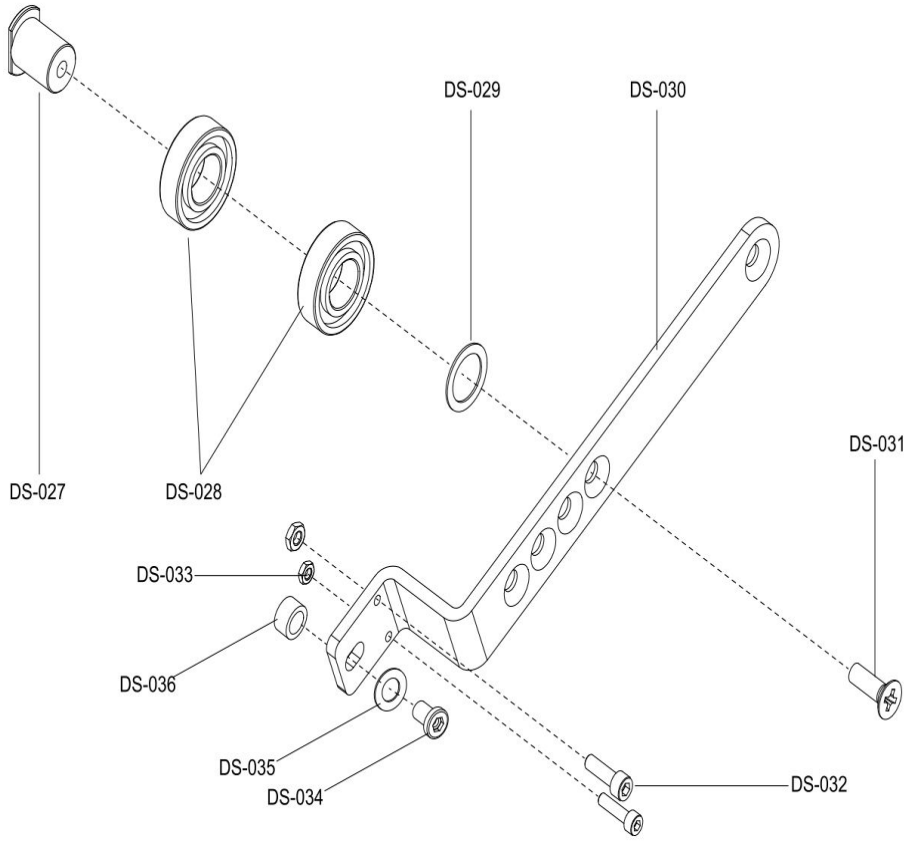

Ref #	Part Number	Qty	Description
DS-027	9071501	1	IDLER SHAFT
DS-028	9071601	2	CRANKSHAFT/IDLER BEARING
DS-029	9091201	1	WASHER DIN 988 - 20X28X1
DS-030	9071701	1	IDLER/FLYWHEEL SUPPORT ARM
DS-031	9095101	1	ISO 7046-1 - M8 X 25 - Z --- 25N
DS-032	9175601	2	ISO 4762 M5 x 25 -- 20N
DS-033	9175501	2	HEXAGON THIN NUT ISO - 4035 - M5 - N
DS-034	9091001	1	DIN 6912 - M8 X 20 --- 20N
DS-035	9175701	1	WASHER DIN 126 - 9
DS-036	9084901	1	FLYWHEEL SUPPORT ARM SPACER

Handlebar Mechanism

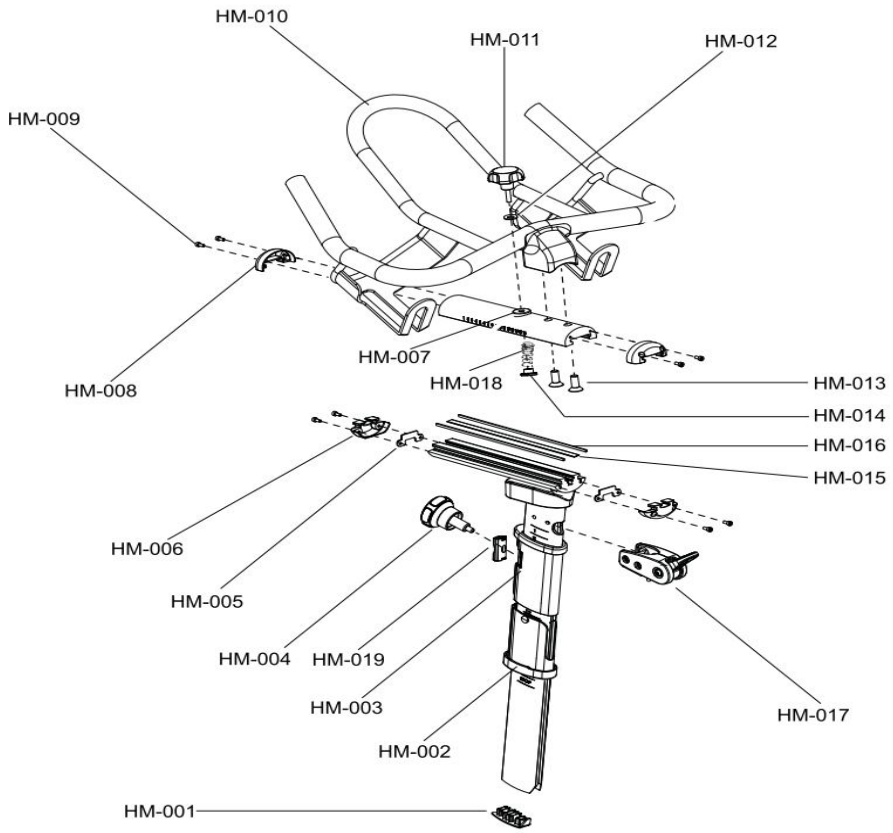

Ref #	Part Number	Qty	Description
HM-001	9086401	1	HB POST BOTTOM ENDCAP
HM-002	9072801	1	HB LOWER SLEEVE
HM-003	9072501	1	UPPER HB/SEAT SLEEVE
HM-004	9073101	1	HB/SEAT VERTICAL ADJUST KNOB
HM-005	9068402	1	SLIDER LIMITER PLATE SS
HM-006	9068201	2	SLIDER BOTTOM ENDCAP
HM-007	9083001	1	HB SLIDER WELDMENT
HM-008	9068301	2	SLIDER TOP ENDCAP
HM-009	9095301	8	ISO 4762 M4x10 --- 6N
HM-010	9068701	1	HANDLEBARS DIPPED WELDMENT
HM-011	9069201	1	HB/SEAT SLIDER ADJUSTMENT KNOB
HM-012	9095601	1	Washer ISO 7093 - 6
HM-013	9095501	2	ISO 10642 - M10x25 --- 30N
HM-014	9072602	1	HANDLEBAR SLIDER T-NUT
HM-015	9086301	1	HB ELECTRICAL CABLE COVER
HM-016	9082701	2	HB/SEAT GLIDE STRIP
HM-017	9177402	1	ASSY; BRAKE LEVER; CHGR
HM-018	9085201	1	HB/SEAT SLIDER SPRING
HM-019	9073002	1	HB/SEAT SLEEVE PUCK SS

Miscellaneous

Ref #	Part Number	Qty	Description
MISC-001	0017-00008-0204	1	ARCTIC SILVER AEROSOL TOUCH UP
MISC-002	0017-00008-0205	1	ARCTIC SILVER TOUCH UP
MISC-003	1004653-0001	1	TOOL: GX, BELT ASSEMBLY GUIDE mfg 200-04-00011-01

Seat Mechanism

Narrow Post Assembly - 02 version
(Uses 1 screw per endcap)

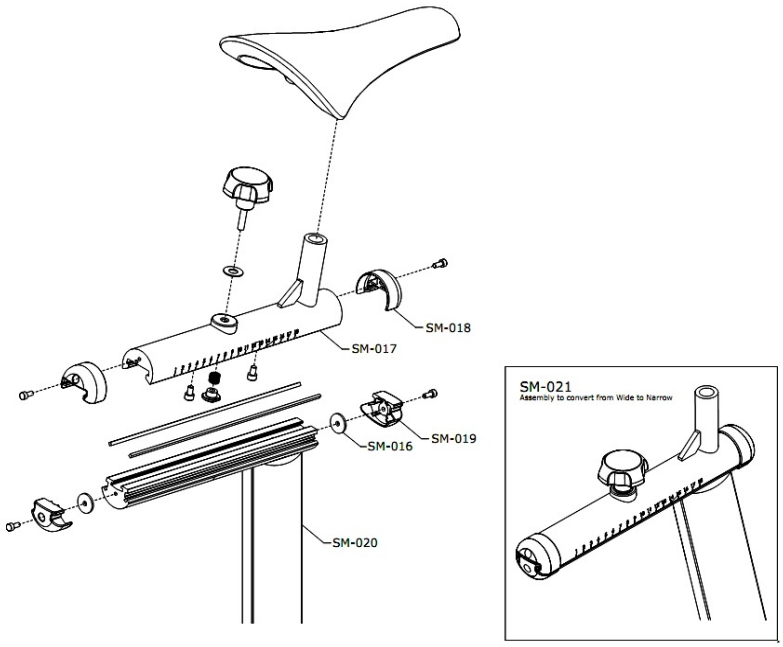

Ref #	Part Number	Qty	Description
SM-003	9068501	2	SEAT GLIDE STRIP
SM-004	9095301	4	ISO 4762 M4x10 --- 6N
SM-005	9095601	1	Washer ISO 7093 - 6
SM-006	9069201	1	HB/SEAT SLIDER ADJUSTMENT KNOB
SM-007	9097401	1	SADDLE ASSEMBLY
SM-007	GECWS-ALLXX-01	1	GROUP EXERCISE LIFECYCLE BIKE WIDE SEAT
SM-010	9072602	1	HANDLEBAR SLIDER T-NUT
SM-011	9073101	1	HB/SEAT VERTICAL ADJUST KNOB
SM-012	9072501	1	UPPER HB/SEAT SLEEVE
SM-014	9085201	1	HB/SEAT SLIDER SPRING
SM-015	9073002	1	HB/SEAT SLEEVE PUCK SS
SM-016	9238001	2	SLIDE LIMITER WASHER
SM-017	9237501	1	SEAT UPPER SLIDER WELDMENT NARROW
SM-018	9237901	2	SLIDER TOP ENDCAP NARROW
SM-019	9237801	2	SLIDER BOTTOM ENDCAP NARROW
SM-020	9237201	1	SEAT STEM WELDMENT NARROW
SM-021	9237101	1	ASSEMBLY: SEAT POST; NARROW

Shrouds, Covers, and Gaskets

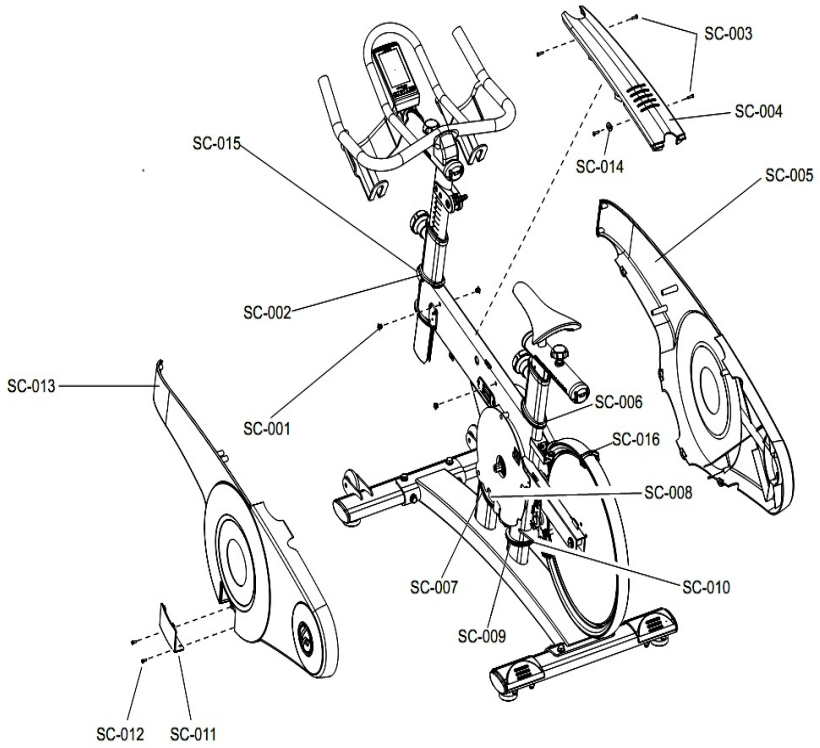

Ref #	Part Number	Qty	Description
SC-001	9084701	1	SHROUD/PCB GROMMET
SC-002	9076001	1	UPPER HANDLEBAR TUBE GASKET
SC-003	9094401	4	Tapping screw DIN 7049-ST2.9x9.5-C-H-N
SC-004	9075302	1	COVER; TOP SHROUD GX; CHGR
SC-005	9098202	1	ASSY; RIGHT SHROUD; CHGR
SC-006	9075901	1	UPPER SEAT TUBE GASKET
SC-007	9098001	1	FOOT TUBE GASKET LEFT
SC-008	9097901	1	FOOT TUBE GASKET RIGHT
SC-009	9097701	1	LOWER SEAT TUBE GASKET LEFT
SC-010	9097801	1	LOWER SEAT TUBE GASKET RIGHT
SC-011	9075203	1	COVER; BATTERY DOOR; CHGR
SC-012	9095301	16	ISO 4762 M4x10 --- 6N
SC-013	9098102	1	ASSY; LEFT SHROUD; CHGR
SC-014	9177501	4	WASHER DIN 126 - 3
SC-015	9075402	1	COVER; FRONT TOP GX; CHGR
SC-016	9075801	1	FLYWHEEL GUARD GASKET

Stabilizer Assembly

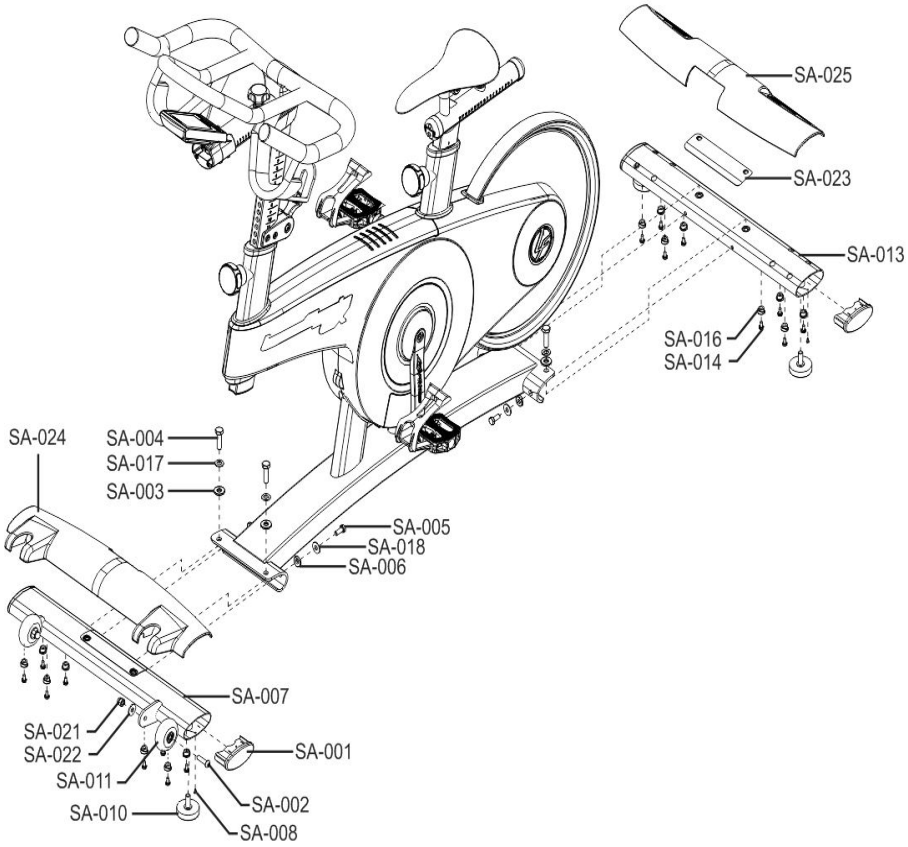

Ref #	Part Number	Qty	Description
SA-001	9076702	4	ENDCAP; STABILIZER; CHGR
SA-003	9175901	2	WASHER ISO 7091 - 10
SA-004	9176101	2	ISO 4017 - M10 X 55-N
SA-005	9094501	2	ISO 4017 - M8 x 20-N
SA-006	9077501	2	CROSSBOLT CUSTOM NYLON WASHER
SA-007	9076202	1	WELDMENT; FRONT STABILIZER; BLK
SA-008	9094401	2	Tapping screw DIN 7049-ST2.9x9.5-C-H-N
SA-010	9076902	4	GX LEVELER SS
SA-011	9076801	2	FRONT STABILIZER WHEEL
SA-013	9077102	1	WELDMENT; REAR STABILIZER; BLK
SA-014	9094302	16	M6 x 16 PHL PAN SS
SA-016	9077401	8	STRETCH PLATFORM WASHER
SA-017	9176001	4	WASHER ISO 7091 - 10 #304
SA-018,SA-022	9407201	10	WASHER, D16 X D8.3 X 1.5T, STAINLESS STEEL
SA-020	9407001	2	BUTTON HEAD SCREW, M8 X 1.25 X 40L, STAINLESS STEE
SA-021	9407101	2	ACORN NUT, M8 X 1.25, STAINLESS STEEL
SA-023	0K91-01014-0000	2	GASKET; STABILIZER/FRAME
SA-024	AK91-00001-0000	1	ASSY; STABILIZER COVER; FRONT
SA-025	AK91-00002-0000	1	ASSY; STABILIZER COVER; REAR

Wiring

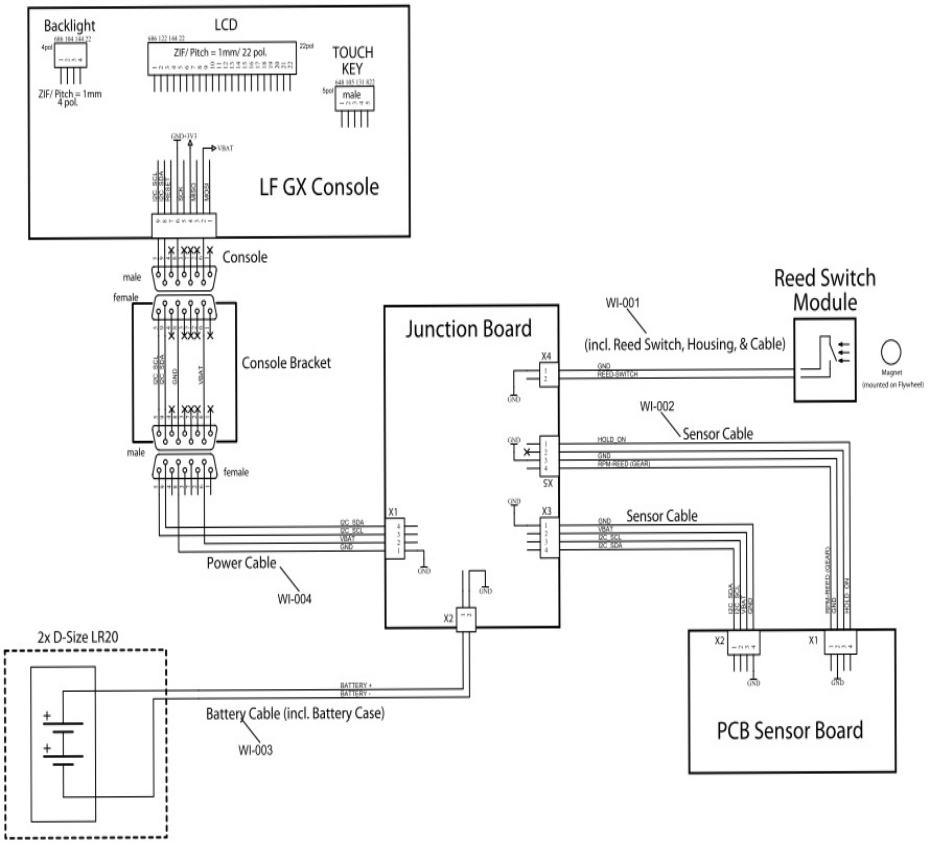

Ref #	Part Number	Qty	Description
W1-001	9079501	1	REED SWITCH MODULE ASSEMBLY
W1-002	9096701	1	SENSOR CABLE
W1-003	9096901	1	BATTERY BOX
W1-004	9086501	1	GX POWER CABLE