INSPIRE

Model # FTXC
ITM # 1334042

USER MANUAL

FTXC | FUNCTIONAL TRAINER

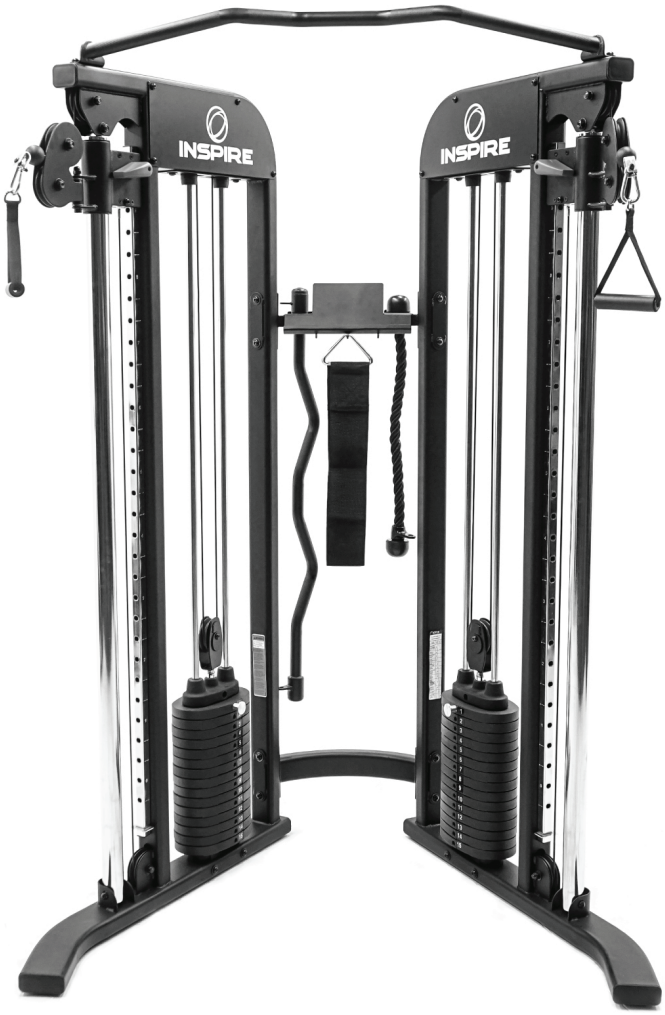

Record Serial Number Here

Health in Motion LLC
V05132022

CONGRATULATIONS

You've just taken the first step to a healthier and stronger body. This functional trainer by Inspire offers the key to unlocking your body's potential. Regular strength training on a functional trainer has been shown to deliver a host of benefits including: increased muscle tone, decreased body fat, improved energy levels, a reduction in stress, and improved cardiac output. Once again, congratulations, you are on your way to improving your self image, overall health, and quality of life.

BEFORE ASSEMBLING YOUR HOME GYM

IMPORTANT: Read this entire manual before attempting to build or use this machine. This manual contains step by step instructions for proper assembly.

Use the parts list included in this manual to verify that all parts are accounted for before assembly. If any parts are missing, contact the retailer of this functional trainer for replacement parts. Or, call Inspire at 877-738-1729.

functional trainer to protect wood flooring or carpeting from damage during assembly and usage.

This functional trainer is intended for indoor use only. Rust can form on certain parts including guide rods in a humid environment, resulting in impaired function.

Service of your functional trainer should only be performed by an authorized Inspire retailer. Service performed by anyone else can result in loss of warranty. **Support is provided in English and Spanish**. If you need help finding an authorized retailer, please contact us directly:

Email
costcosupport@inspirefitness.com

Phone
877-738-1729 (US Only)
+1 714-738-1729 (International)
Mon-Fri 8am-5pm PT - UTC-7h/8h

Chat
www.inspirefitness.com

Support is provided in English and Spanish

PRODUCT WARRANTY

To view full warranty details, or to register your product for warranty, visit **inspirefitness.com/support**

AUSTRALIA
Our goods come with guarantees that cannot be excluded under the Australian Consumer Law. You are entitled to a replacement or refund for a major failure and for compensation for any other reasonably foreseeable loss or damage. You are also entitled to have the goods repaired or replaced if the goods fail to be of acceptable quality and the failure does not amount to a major failure.

TABLE OF CONTENTS

IMPORTANT SAFETY NOTICE PRECAUTIONS.....5

TOOLS REQUIRED FOR ASSEMBLY.....5

HARDWARE SIZING CHART.....6

FUNCTIONAL TRAINER ASSEMBLY INSTRUCTIONS.....9

DECAL PLACEMENT.....13

GENERAL MAINTENANCE INFORMATION.....14

MAINTENANCE SCHEDULE.....14

PARTS LIST.....15

IMPORTANT SAFETY NOTICE PRECAUTIONS

This exercise machine is built for optimum safety. However, certain precautions apply whenever you operate a piece of exercise equipment. Be sure to read the entire manual before you assemble or operate your machine. In particular, note the following safety precautions:

1. Keep children and pets away from the machine at all times. DO NOT leave children unattended in the same room with the machine.
2. Only one person at a time should use the machine.
3. If the user experiences dizziness, nausea, chest pain, or any other abnormal symptoms, STOP the workout at once. Consult a Physician.
4. Position the machine on a clear, leveled surface. Do not use outdoors.
5. Keep hands away from all moving parts.
6. Always wear appropriate workout clothing when exercising. Running or aerobic shoes are also required when using the machine.
7. Use the machine only for its intended use as described in this manual.
8. Disabled persons should not use the machine without a qualified person or physician in attendance.
9. Always do stretching exercises to properly warm up before using machine.
10. Never operate the machine if it is not functioning properly.
11. A spotter is recommended during exercise.

TOOLS REQUIRED FOR ASSEMBLY

Tools Required for Assembling the Machine: Adjustable Wrench and Allen Wrenches. NOTE: Two or more people assembling this machine is a must. DO NOT attempt to assemble this machine alone

HARDWARE SIZING CHART

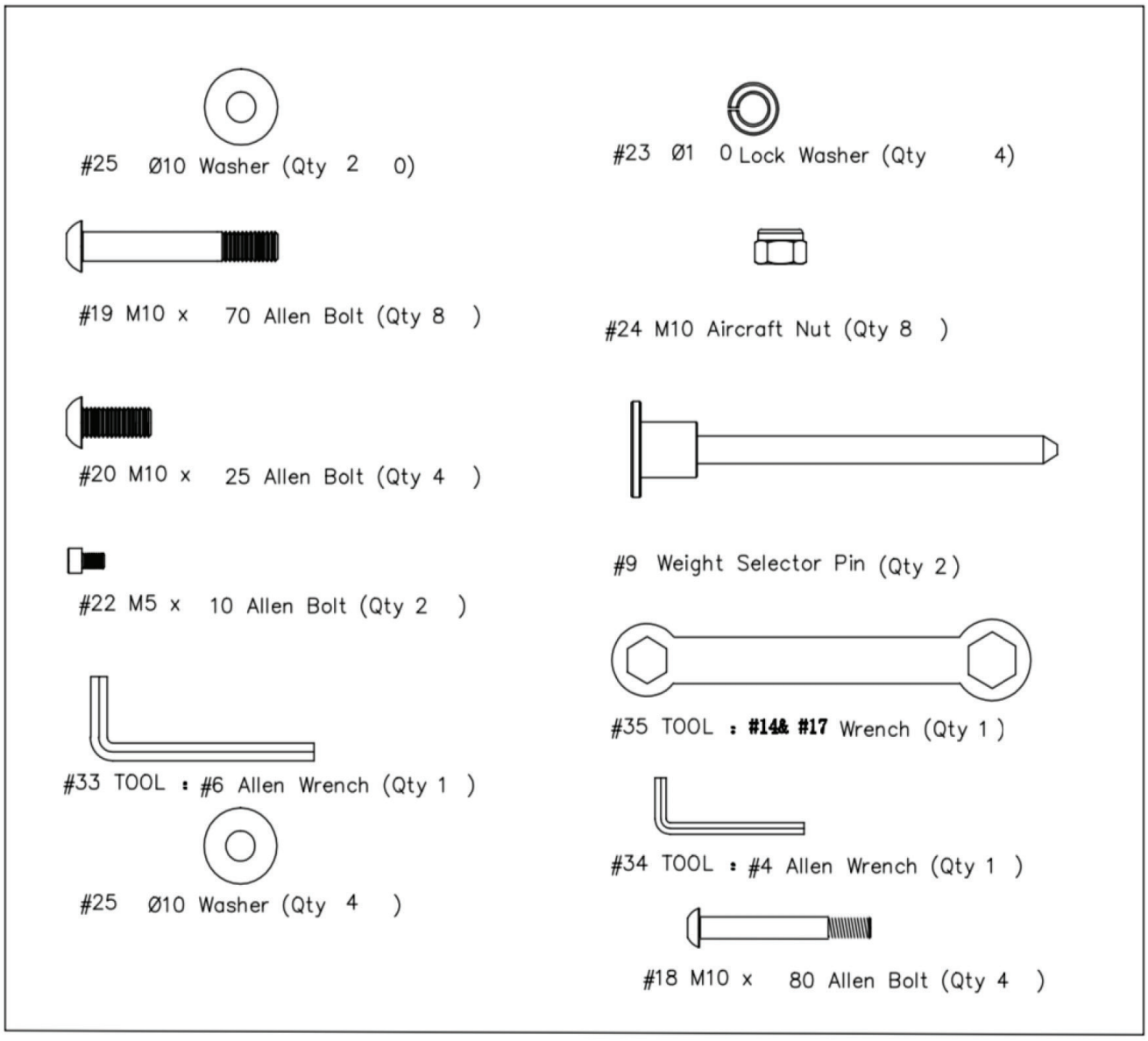

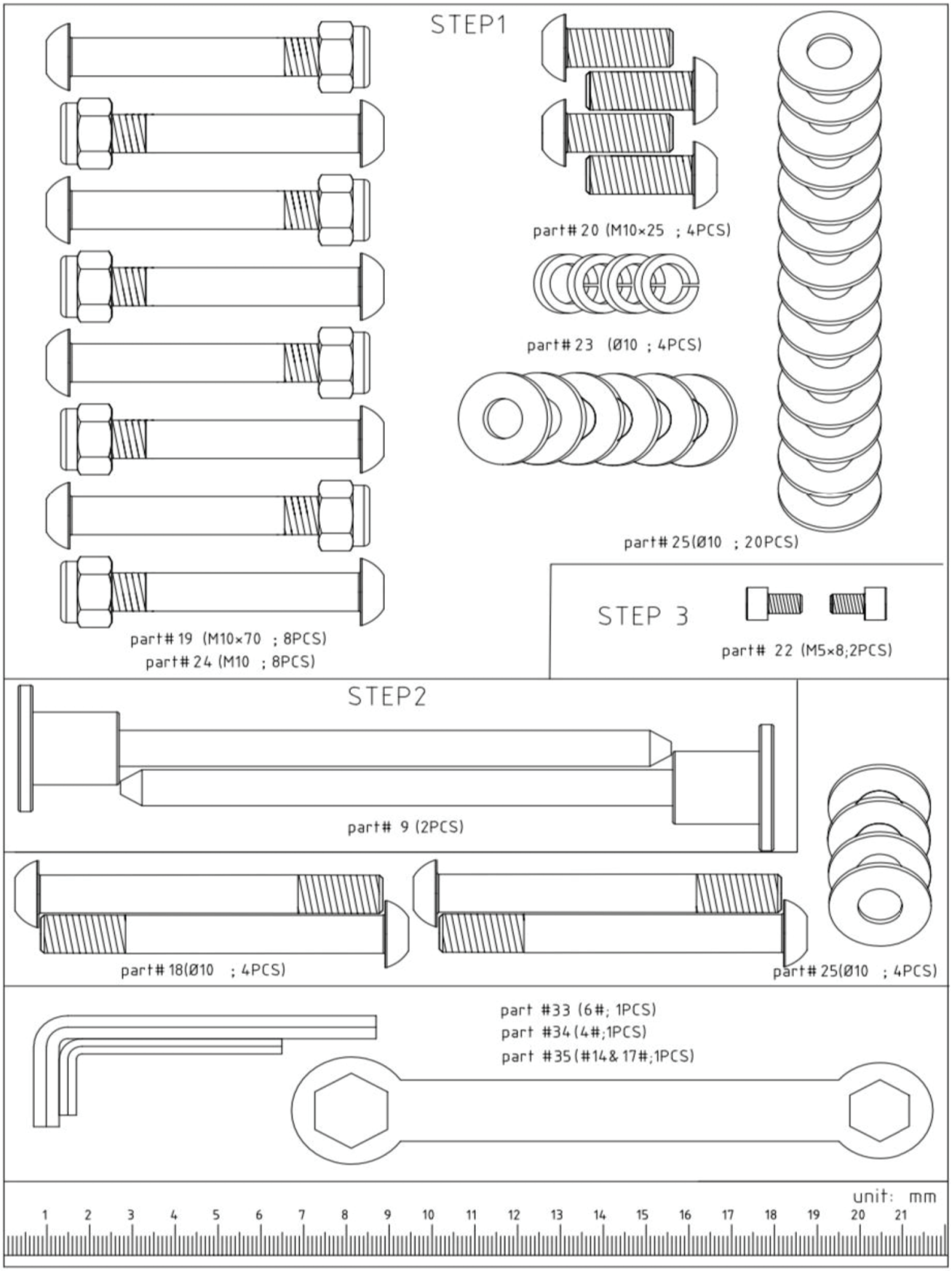
STEP1
part# 20 (M10×25 ; 4PCS)
part# 23 (Ø10 ; 4PCS)
part# 25(Ø10 ; 20PCS)
part# 19 (M10×70 ; 8PCS)
part# 24 (M10 ; 8PCS)
STEP 3
part# 22 (M5×8;2PCS)
STEP2
part# 9 (2PCS)
part# 18(Ø10 ; 4PCS)
part# 25(Ø10 ; 4PCS)
part #33 (6#; 1PCS)
part #34 (4#;1PCS)
part #35 (#14& 17#;1PCS)
unit: mm
1 2 3 4 5 6 7 8 9 10 11 12 13 14 15 16 17 18 19 20 21

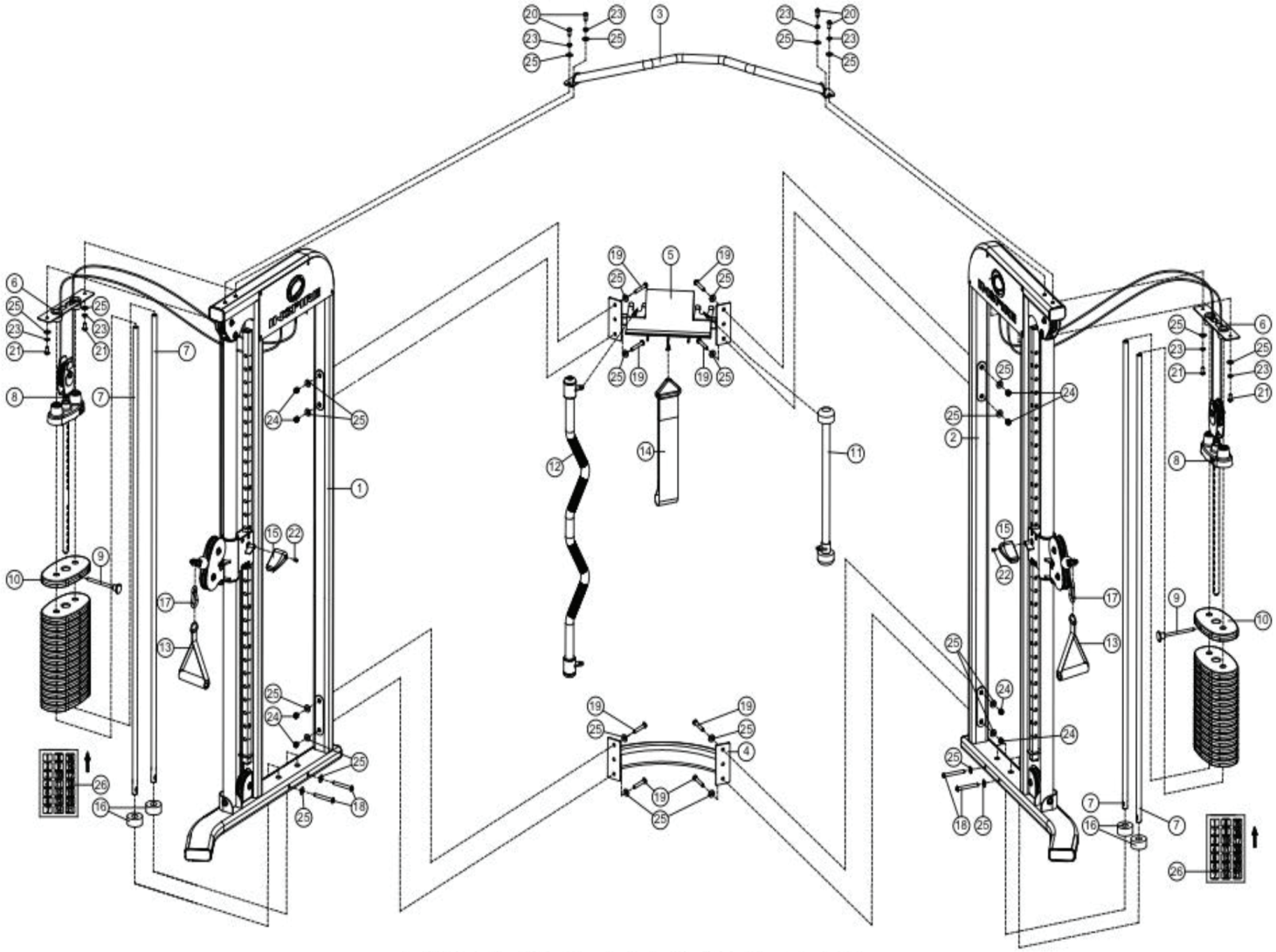

EXPLODED DIAGRAM

FUNCTIONAL TRAINER ASSEMBLY INSTRUCTIONS

STEP 1

A. Do not tighten the Nuts and Bolts until instructed to do so.

B. Place the Lower Cross Brace **(#4)** between the Right & Left Stations **(#1 & #2)** in the mid-span.

C. Attach one end of the Lower Cross Brace to the Right Station. Secure it with two M10 x 70 Allen Bolts **(#19)** four Ø 10 Washers **(#25)**, and two M10 Aircraft Nuts **(#24)**. Repeat the same procedure to install the other side.

D. Repeat Procedure **B & C** to install the Upper Cross Brace **(#5)**.

E. Place the Pull Up Bar Assembly **(#3)** on top of the Right and Left Stations.

F. Secure each end with two M10 x 25 Allen Bolts **(#20)**, two Ø 10 ″ Lock Washers **(#23)**, and Ø 10 Washers **(#25)**.

G. Securely tighten all Nuts and Bolts installed.

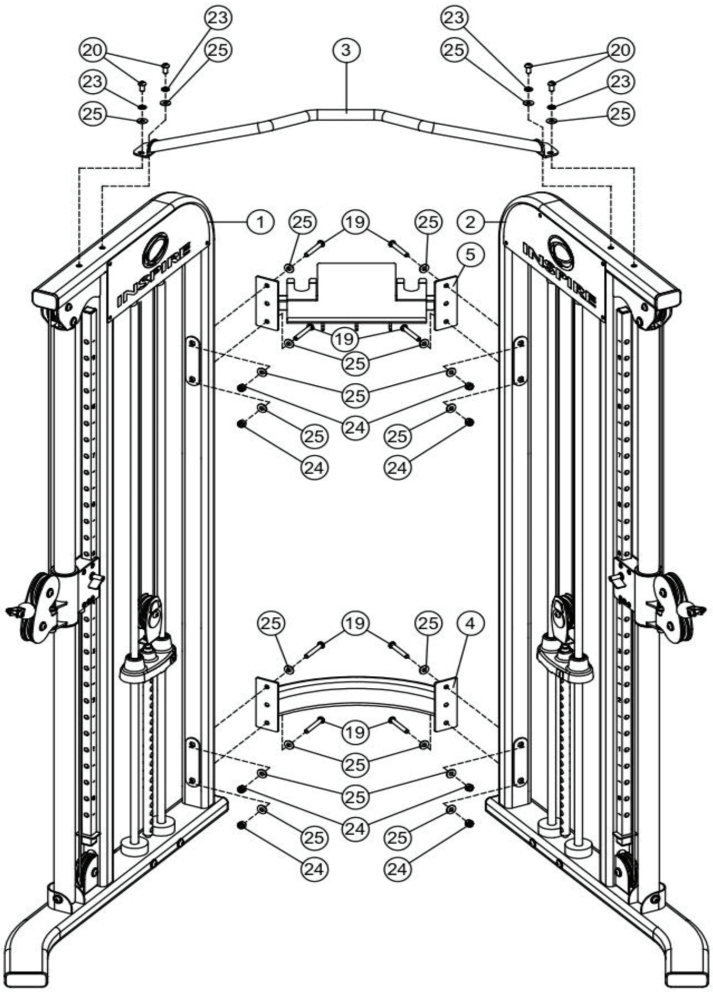

STEP 2

A. Install Guide Rods **(#7)** into holes on bottom Frame using M10 x 80 Allen Bolt **(#18)** and Ø 10 Spring Washers **(#25)**. Tighten bolts now.

B. Install Rubber Bumpers **(#16)** on each Guide Rod **(#7)**. Slide fifteen 10lb Weight Plates **(#10)** from the top of Guide Rods **(#7)** down to the Rubber Bumpers **(#16)**. Make sure the weight sticker cut out is facing the inside of the machine.

C. Remove the two M10 x 19 Allen Bolts **(#21)**, Ø 10 Spring Washers **(#23)**, and Ø 10 Washers **(#25)** which were pre-assembled in the factory to hold the Guide Rod Bracket **(#6)**. Slide the Selector Stem Assembly **(#8)** onto the Guide Rods **(#7)**. Install Large Pulley **(#30)** and wrap the cable between the U-shaped Pulley Bracket **(#27)** using the M10 x 2 **(#29)** Allen Bolt located on the Selector Steam Assembly **(#8)**.

D. Hold the Selector Stem Assembly **(#8)** above the weight stack to make it easier to install Guide Rod Bracket **(#6)** on Guide Rods **(#7)**.

E. Once the Guide Rod Bracket **(#6)** is installed onto the Guide Rods **(#7)**, Push the Guide Rod Bracket back into the upright.

F. Secure the Bracket back to the upright frame with the two M10 x 19 Allen Bolts **(#21)**, Ø 10 lock Washers **(#23)**, Ø 10mm Washers **(#25)**.

G. Lower the Selector Stem down onto the top of the weight stack.

H. Check all the cables to make sure they are on track on the pulleys.

I. Peel off the weight resistance label from the Resistance Label Set **(#26)** and attach to the plates.

J. Insert the Weight Selector Pin **(#9)** into the weight stack.

K. Lubricate the Guide Rods with super lube or lube provided in Hardware Pack.

L. If Needed, Adjust the Cable tension by first loosening the M10 x 2 **(#29)** Allen Bolt located on the Selector Steam Assembly **(#8)** then rotate the Tension Adjustment Plate **(#28)** clock or counterclockwise to move the Bolt and the Large Pulley **(#30)** up and down along the open track inside the U-shaped Pulley Bracket **(#27)**. Once desired tension is achieved, securely tighten the Bolt **(#29)** back.

M. **Repeat the Procedure A through N** above to install the other set of weight plates to the Left Station. **(#2)**

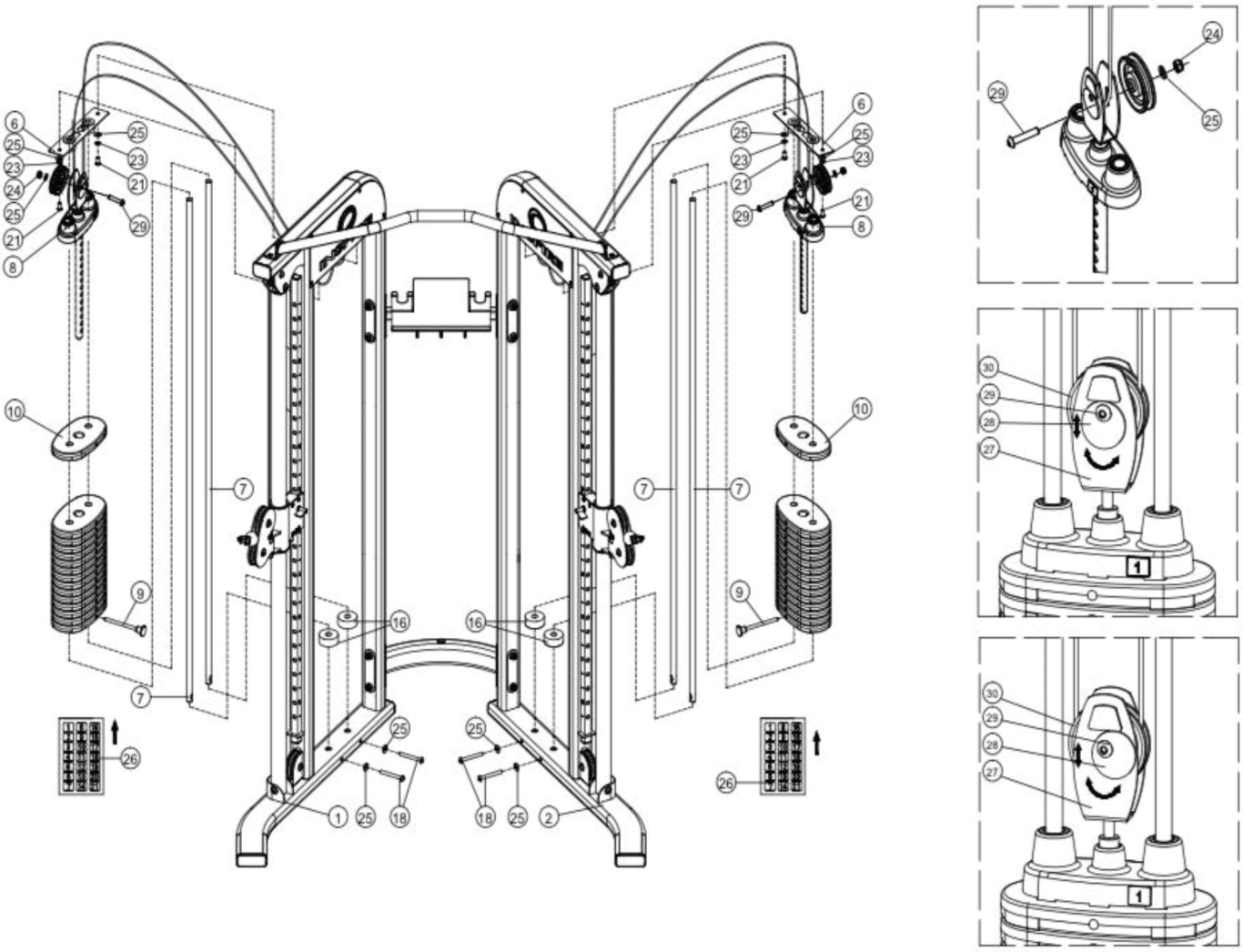
6
25
23
24
21
8
29
10
7
9
16
26
1
18
2
30
28
27

STEP 3

A. Attach the Height Adjustment Handle **(#15)** to the Left Lock Switch **(#32)** on the Pulley Carriage. (Not shown on diagram) And secure it with one M5 x 10 Allen Bolt **(#22)**. Repeat the same procedure to install the other side.

B. Connect the Single Handle **(#13)** to the Cable **(#1)** on the Right Station **(#1)** with a Spring Clip **(#17)**. Repeat the same procedure to install the other side.

C. Lift up the Height Adjustment Handle **(#15)** and slide the Pulley Carriage along the Pulley Carriage Support Frame to the selected level. Release the Handle to lock the Pulley Carriage in position.

D. Store Curl Bar **(#12)**, and Rope **(#11)** onto the Hanger Bracket behind the Upper Cross Brace **(#5)**. Hang Chin Up Belt **(#14)** on Upper Cross Brace **(#5)**.

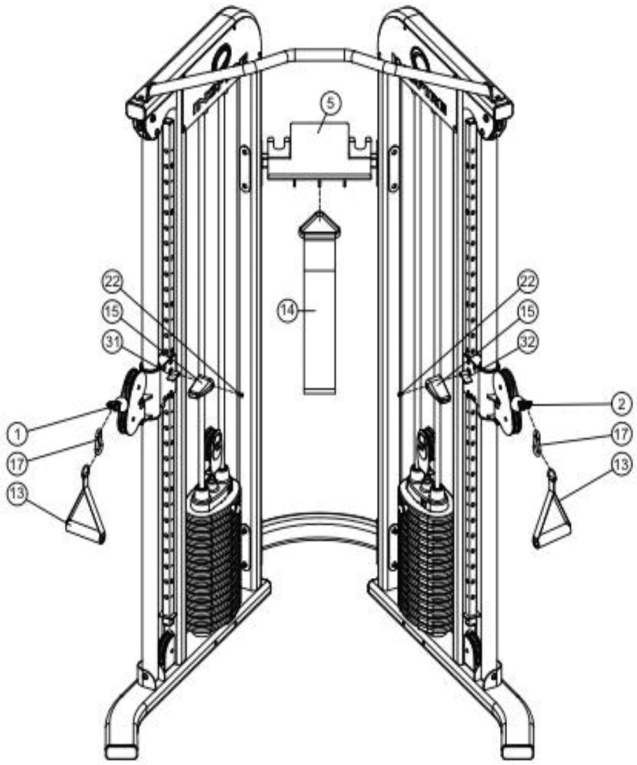

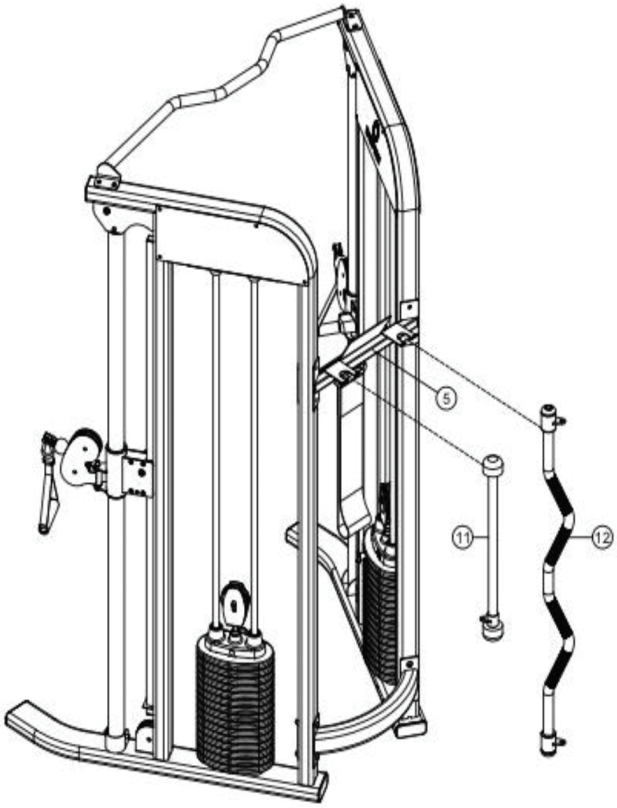

DECAL PLACEMENT

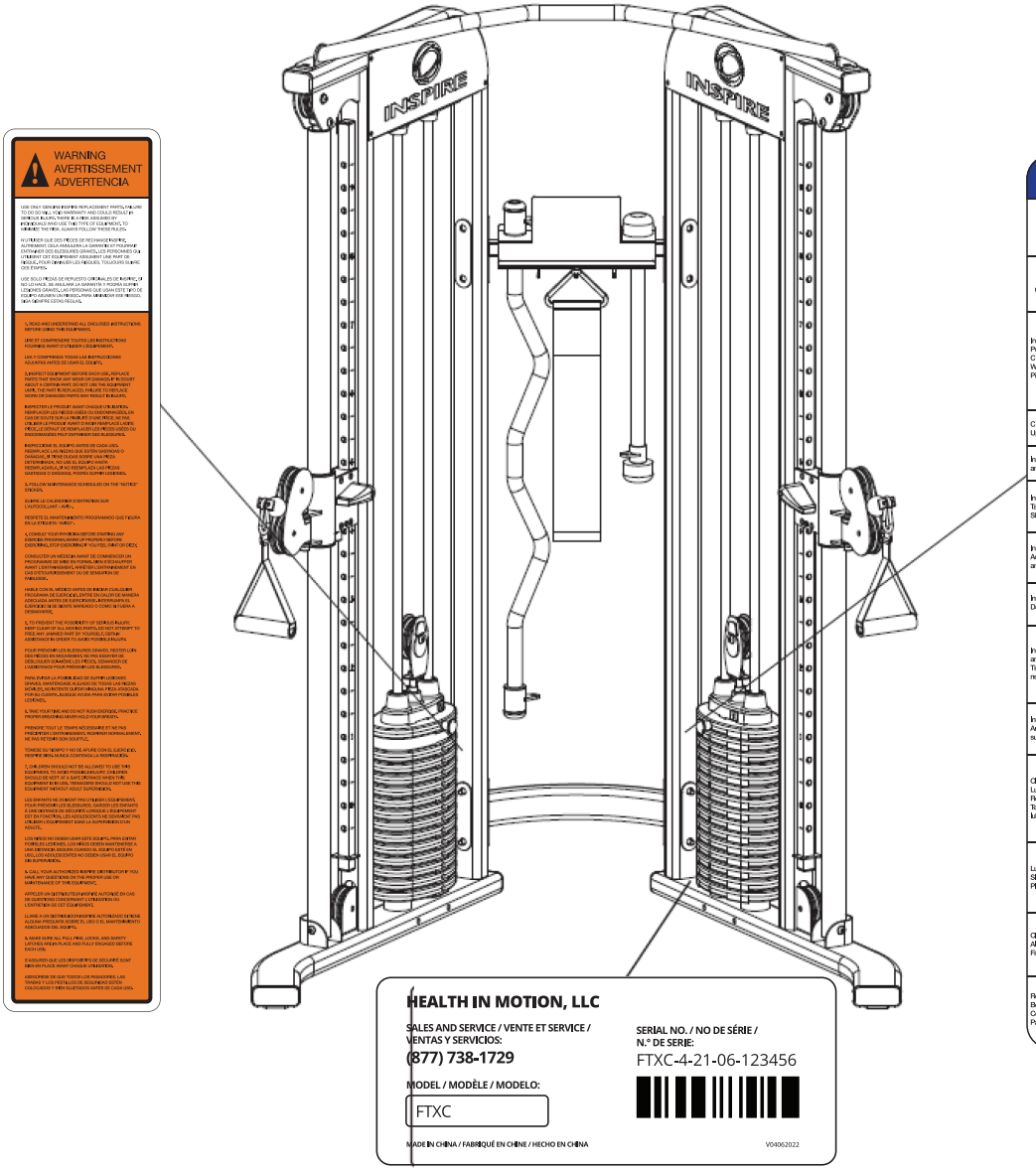

NOTICE

This INSPIRE product is not intended for commercial use

In home maintenace	Weekly	3 Months	Yearly	2 Years
Inspect: Links, Pull Pins, Spring Clips, Swivels, Weight Stack Pins	X			
Clean: Upholstery	X			
Inspect: Cables and their Fittings	X			
Inspect: Tautness of all Shrouds	X			
Inspect: Accessory Bars and Handles		X		
Inspect: All Decals		X		
Inspect: All Nuts and Bolts, Tighten if needed.		X		
Inspect: Anti-Skid surfaces		X		
Clean and Lubricate: Guide Rods with a Teflon based lubricant		X		
Lubricate: Seat Sleeves and all Plastic Slides		X		
Clean and Wax: All Glossy Finishes			X	
Replace: Cables, Bolts and Connecting Parts				X

GENERAL MAINTENANCE INFORMATION

- Periodically inspect the cables for splitting, cracking or fraying. Also, watch for bulging or flat areas in the cable.
- Immediately replace cables at the first signs of damage or wear. Never use equipment with damaged or worn cables.
- Cables naturally stretch over time, so check cable slack periodically and adjust cable tension as needed.
- Regularly inspect product for loose hardware.
- Do not use or store equipment outdoors.
- Inspect snap links, swivels, handles, and weight stack pins for wear or damage. If wear or damage exists, replace immediately.
- Locate and familiarize yourself with all warning decals on the multi-gym.
- Replace damaged or worn upholstery immediately.
- Periodically wipe down guide rods with a dry cloth and re-apply a thin coat of a Teflon-based lubricant.

MAINTENANCE SCHEDULE

ROUTINE	HOME MAINTENANCE	ENTRY DATE								
Inspect: Links, Pull Pins, Spring Clips, Swivels, Weight Stack Pins	WEEKLY									
Clean: Upholstery	WEEKLY									
Inspect: Cables and their Fittings	WEEKLY									
Inspect: Tautness of all Shrouds	WEEKLY									
Inspect: Accessory Bars and Handles	3 MONTHS									
Inspect: All Decals	3 MONTHS									
Inspect: All Nuts and Bolts. Tighten if Needed	3 MONTHS									
Inspect: Anti-Skid surfaces	3 MONTHS									
Clean and Lubricate: Guide Rods with a Teflon based lubricant	3 MONTHS									
Lubricate: Seat Sleeves and all Plastic Slides	3 MONTHS									
Clean and Wax: All Glossy Finishes	YEARLY									
Replace: Cables, Belts and Connecting Parts	2 YEARS									

PARTS LIST

No.	Description	Part Number	Qty.
1	Right Station Assembly	GM692200408PZ	1
2	Left Station Assembly	GM692200409PZ	1
3	Upper Frame Assembly	GM692220002PZ02	1
4	Lower Cross Brace	GM690260001PT0105	1
5	Upper Cross Brace	GM692300004PT0105	1
6	Guide Rod Bracket & Ring Cap	GM692381001PT0105 GM692-881-002	2
7	Guide Rod	GM692-381-002	4
8	Selector Stem Assembly	GM692500003PZ10	2
9	Weight Selector Pin	GM692-500-004	2
10	Weight Plate		30
11	Rope	GM692-881-011	1
12	Curl Bar	GM691320003PZ02	1
13	Single Handle	GM660820001WX07	2
14	Chin Up Belt	GM692-400-005SK	1
15	Height Adjustment Handle	GM691-880-003SK	2
16	Rubber Bumper	GM692-881-003	4
17	Hook	0200-070-082	2
18	M10 x 80 Allen Bolt	0113-210-806	4
19	M10 x 70 Allen Bolt	0113-210-708	8
20	M10 x 25 Allen Bolt	0113-210-258	4
21	M10 x 19 Allen Bolt	0113-210-208	4
22	M5 x 10 Allen Bolt	0113-705-088	2
23	Ø 10 Lock Washer	0116-310-028	8
24	M10 Aircraft Nut	0110-710-008	8
25	Ø 10 Washer	0116-210-508	28
26	Resistance Label Set	GM692-900-001	2
27	U-shaped Pulley Bracket	GM692-500-002	2
28	Ø 2” Tension Adjustment Plate	GM690-501-006	2
29	M10 x 2” Allen Bolt	0113-210-508	2
30	Pulley	GM692-880-001	2
31	Right Lock Switch	GM690-320-003	1
32	Left Lock Switch	GM690-320-004	1
Tool List			
33	#6 Allen Wrench (Tool)	0511-606-03	1
34	#4 Allen Wrench (Tool)	0511-604-01	1
35	14#&17# Wrench (Tool)	M330-561-002	1

INSPIRE

Model # FLB2C

USER MANUAL

FLB2C

FOLDING ADJUSTABLE BENCH

Record Serial Number Here

Health in Motion LLC
V05132022

IMPORTANT SAFETY NOTICE

PRECAUTIONS

This exercise bench is built for optimum safety. However, certain precautions apply whenever you use a piece of exercise equipment. Be sure to read the entire manual before you assemble or use your bench. In particular, note the following safety precautions:

1. Keep children and pets away from the bench at all times.
2. Only one person at a time should use the bench.
3. If the user experiences dizziness, nausea, chest pain, or any other abnormal symptoms, STOP the workout at once. Consult a Physician.
4. Position the bench on a clear, leveled surface. Do not use outdoors.
5. Keep hands away from all moving parts.
6. Always wear appropriate workout clothing when exercising. Running or aerobic shoes are also required when using the bench.
7. Use the bench only for its intended use as described in this manual.
8. Disabled persons should not use this bench without a qualified person or physician in attendance.
9. Always do stretching exercises to properly warm up before using this bench.
10. Never use this bench if it is not functioning properly.
11. A spotter is recommended during exercise.
12. Maximum **USER** weight on bench is 136 kg / 300 lb. This means that a **PERSONS** maximum weight can be up to 136 kg / 300 lb. **The total weight capacity that the bench can hold is 226.8 kg / 500 lb**.

CARE AND MAINTENANCE

1. Regularly inspect product for loose hardware.
2. Do not use or store equipment outdoors.
3. Locate and familiarize yourself with all warning decals on the home gym.
4. Replace damaged or worn upholstery immediately.

BEFORE YOU BEGIN

Thank you for selecting the Inspire Fitness FLB2C. Service of your bench should only be performed by an authorized Inspire retailer. Service performed by anyone else can result in loss of warranty. For your safety and benefit, read this manual carefully before using the machine. As a manufacturer, we are committed to providing you complete customer satisfaction. If you have any questions, or find there are missing or damaged parts, please call our TOLL-FREE customer service number. Our Customer Service agents will provide immediate assistance to you. **Support is provided in English and Spanish.**

Email
costcosupport@inspirefitness.com

Phone
877-738-1729 (US Only)
+1 714-738-1729 (International)
Mon-Fri 8am-5pm PT - UTC-7h/8h

Chat
www.inspirefitness.com

Support is provided in English and Spanish

PRODUCT WARRANTY

To view full warranty details, or to register your product for warranty, visit **inspirefitness.com/support**

AUSTRALIA
Our goods come with guarantees that cannot be excluded under the Australian Consumer Law. You are entitled to a replacement or refund for a major failure and for compensation for any other reasonably foreseeable loss or damage. You are also entitled to have the goods repaired or replaced if the goods fail to be of acceptable quality and the failure does not amount to a major failure.

This bench is for adult use only. Do not let children play with the bench. Use caution while adjusting or working out on the bench.

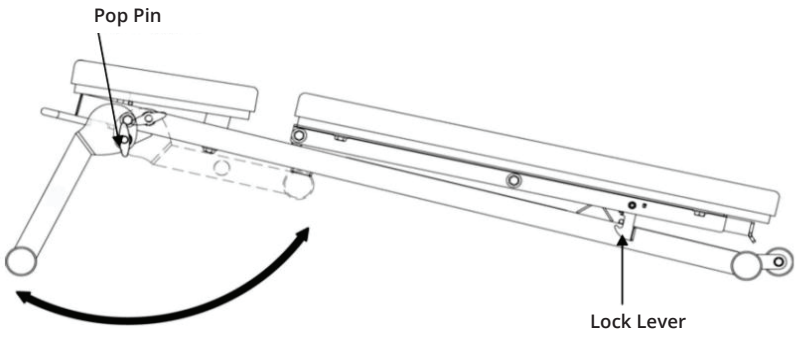

Pull pop pin to unfold or fold leg. Make sure hands are clear of pivot area. Make sire pop pin is fully engaged in locking holes after each adjustment.

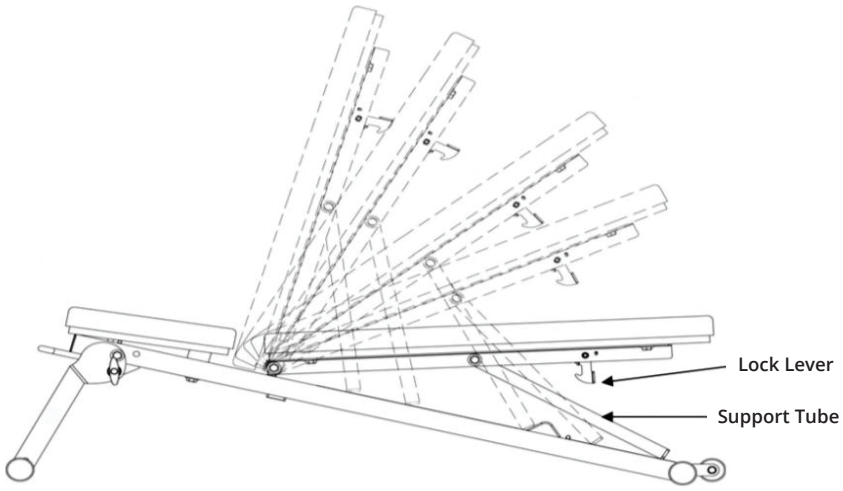

Swivel lock lever under pad to release back pad. Raise the head end of the pad so the free end of the suport tube slips into a slot for a desired position. Before use, make sure the support tube is secure in a slot.

When folding the bench flat, keep hands clear of any pivot areas or closing areas. make sure the lock lever is locked over catch pin before moving.

INSPIRE

www.inspirefitness.com

V05132022